**[별첨 : GR1000N-1 공급사양 ]**

TADANO

Lifting your dreams

# GR-1000N ( I )

6단붐
3단풀 오토 지브
H형 아웃트리거

CREVO 1000 G4

## ■ 주요제원

● 크레인

| | | |
|---|---|---|
| 크레인 용량 | 10.2m 붐 | 100,000kg X 1.6m (10본X2) |
| | 13.7m 붐 | 45,000kg X 5.0m (9본) |
| | 17.2m 붐 | 45,000kg X 3.5m (9본) |
| | 20.7m 붐 | 40,000kg X 4.5m (8본) |
| | 24.2m 붐 | 35,000kg X 3.5m (7본) |
| | 27.7m 붐 | 25,000kg X 5.5m (5본) |
| | 31.2m 붐 | 20,000kg X 7.0m (4본) |
| | 34.7m 붐 | 18,400kg X 6.5m (4본) |
| | 38.2m 붐 | 15,000kg X 7.0m (3본) |
| | 41.7m 붐 | 12,100kg X 9.0m (3본) |
| | 45.2m 붐 | 9,700kg X 11.0m (3본) |
| | 48.0m 붐 | 7,500kg X 12.0m (3본) |
| | 8.4m지브 | 4,000kg X 16.0m (1본) |
| | 13.1m지브 | 2,800kg X 14.0m (1본) |
| | 17.7m지브 | 1,500kg X 11.0m (1본) |
| | 싱글톱 | 5,000kg (1본) |
| 최대 지상양정 | 붐 | 48.7m |
| | 지브 | 66.3m |
| 최대 작업반경 | 붐 | 38.0m(표준성능,CW무),44.0m(스마트차트1,CW장착) |
| | 지브 | 44.0m(표준성능,CW무),56.0m(스마트차트1,CW장착) |
| 붐 길이 | | 10.2m ~ 48.0m |
| 붐 신축길이 | | 37.8m |
| 붐 신장속도 | | 37.8m/310s |
| 지브 길이 | | 8.4m~17.7m |
| 권상 속도 (로프 속도) | 주권 | 127m/min(5층) |
| | 보권 | 115m/min(3층) |
| 후크 권상 속도 | 주권 | 12.7m/min (10본) |
| | 보권 | 115m/min (1본) |
| 권하 속도 (로프 속도) [참고] | 주권 | 표준 : 120m/min(5층), 고속 : 183m/min(5층) |
| | 보권 | 표준 : 100m/min(3층), 고속 : 156m/min(3층) |
| 붐 기복 각도 | | 0°~84° |
| 붐 상승 속도 | | 0°~84°/63s |
| 선회 각도 | | 360° 연속 |
| 선회 속도 | | 1.85min$^{-1}${rpm} |
| 와이어 로프 | 주권 | 경 16mm X 길이 230m 비자전성 와이어로프 |
| | 보권 | 경 16mm X 길이 147m 비자전성 와이어로프 |
| 후크 | | 50톤 후크(10본), 35톤 후크(7본), 5톤 후크(1본) |
| 붐 형식 | | 라운드형 6단 유압신축식 (각단 핀타입방식) |
| 붐 신축장치 | | 복동유압 실린더 직압식 1본 |
| 지브 형식 | | 퀵턴(quick-turn)식(붐 하향 측면 격납식)<br>3단(3단유압신축식),옵셋 5°~60° 유압 무단계 경사식 |
| 싱글 톱 형식 | | 선단 붐 고정식 |
| 권상 장치 | | 유압모터 구동 유성 톱니바퀴 감속식, 자동 브레이크,<br>고속 권하 기능, 싱글 윈치 2기, 압력보상부 유량 조정밸브 |
| 붐 기복 장치 | | 복동 유압 실린더 직압식 2본 압력보상부 유량조정 밸브 |
| 선회 장치 | | 유압모터 구동 유성 톱니바퀴 감속식, 볼베어링식,<br>선회프리(free)·록(Lock)전환식,네거티브 브레이크 |
| 카운터웨이트 | | 4t |
| 아웃트리거 | | 전유압식 H형(플로트 일체형), 슬라이드. 잭 각 개별조작장치<br>확장폭: 최대 7.8m, 중간 7.6m,7.2m,6.4m,5.38m,4.18m,<br>최소 2.36m |
| 조작 방식 | | 전기조작식 |
| 작업시 최대노면하중 | | 45.3t |
| 동력 취출방식 | | P.T.O.습식다판 클러치식 |
| 유압펌프 | | 2연 가변 피스톤펌프, 2연 기어펌프 |
| 안전장치 | | 과부하 방지장치(AML), 선회 자동정지장치,기복완정지장치,<br>과권 방지장치, 작업영역 제어장치,아웃트리거 확장폭 검출장치,<br>신축 실린더 유압 잠금장치,기복 실린더 유압 잠금장치,<br>파워 틸트 실린더 유압 잠금장치,수준기, 유압 안전밸브,<br>잭 실린더 유압 잠금장치,선회잠금장치,<br>지브 신축실린더 유압잠금장치, 로프 이탈 방지장치 |
| 부속장치 | | 윈치드럼감시카메라, AML외부표시등, 노견등,<br>제습 기능 포함 에어컨,작동유 온도 표시등, 확성기<br>FM.AM 라디오,오일 쿨러, 시각식 드럼 회전 지시장치,<br>조작패달 TADANO 배열의 경우 : 기복용 및 신축용<br>작업준비용 리모컨<br>위성통신단말기, 무선랜 통신단말<br>연료 소비 모니터, 에코 모드,작동유막힘 경보장치 |
| 부속품 | | 지지목(4개), 알루미늄 판(4매) |

● 캐리어

| | | |
|---|---|---|
| 차명 및 형식 | | TADANO YDS-T013 |
| 엔진 | 명칭 | 커민스 QSL9-4B<br>(과급기,급기냉각기 및 요소수 SCR시스템장착) |
| | 형식 | 수냉4사이클 6기통 직접 분사식 디젤엔진 |
| | 총 배기량 | 8.849L |
| | 최고출력 | 283KW{385PS}/1.900min$^{-1}${rpm} |
| | 최대토크 | 1627N·m{166kgf·m}/1,500min$^{-1}${rpm} |
| 토크 컨버터 형식 | | 3요소 1단 (자동 Lock-up 기구 포함) |
| 변속기 형식 | | 자동 및 수동변속식,파워 시프트식(습식 다판클러치),<br>전진4단,후진 1단 (Hi,Lo 포함) |
| 감속기 형식 | | 차축 2단 감속식(2,3,4축) |
| 구동 방식 | | 4WD(8X4)·6WD(8X6) 전환식 |
| 차축방식(전축) | | 전부동식 |
| 현가방식(전축) | | 하이드로 뉴매틱 서스펜션 (유압 잠금 실린더 포함) |
| 스티어링 형식 | | 전유압식 파워 스티어링 |
| 브레이크 | 주브레이크 | 공기유압 복합식 디스크 브레이크 |
| | 주차브레이크 | 공기식 추진축 제어 내부확장형 스프링브레이크(2,4축) |
| | 보조 브레이크 | 영구자석식 리타더, 엔진리타더 |
| | | 작업용 보조 제동장치 |
| 프레임 | | 상자형 용접구조 |
| 배터리 | | 12V-120Ah X 2개 (24V) |
| 연료탱크 용량 | | 400L |
| 요소수탱크용량 | | 38L |
| 타이어 | 전륜 | 385/95 R25 170E ROAD |
| | 후륜 | 385/95 R25 170E ROAD |
| 운전실 | | 승차정원 1명, 내장 부착, 고무 마운트 방식,<br>Full Adjustable Seat<br>(헤드 레스트, 암 레스트, 안전밸트 포함),<br>조정식 핸들(틸트, 신축),<br>간헐식 프론트,천장 와이퍼 (워셔 포함),<br>파워 윈도우, 사이드 바이저 |
| 안전장치 | | 긴급 조타장치, 서스펜션 잠금 장치,<br>후륜 스티어링 잠금장치,<br>엔진 오버런 경보장치,<br>오버 시프트 방지장치, 주차 브레이크 경보장치,<br>붐 좌우 사이드 카메라,<br>라제이터 액면 경보장치, 작동유 누유 경보장치 |
| 부속장치 | | 히터 전동 격납미러, 부감 영상표시장치,<br>도난방지장치, 타이어 고정판, LED헤드램프<br>인물감지경보장치 |

● 주행시 치수

| | | |
|---|---|---|
| 전장 | | 13,240mm |
| 전폭 | | 2,780mm |
| 전고 | | 3,750mm |
| 축거 | | 1,500mm |
| | | 4,000mm |
| | | 1,500mm |
| 윤거 | 전륜 | 2,330mm |
| | 휴륜 | 2,330mm |

● 주행시 성능

| | |
|---|---|
| 최고속도 | 49km/h |
| 등판능력(tanθ) | 0.46 |
| 최소회전반경 | 7.5m<br>(8륜스티어링) |
| | 11.5m<br>(전4륜스티어링) |

● 중량

| | |
|---|---|
| 차량총중량 | 41,295kg |
| 전전축중 | 10,240kg |
| 전후축중 | 10,500kg |
| 후전축중 | 10,320kg |
| 후후축중 | 10,235kg |

● 최대작키반력(작업시최대노면하중)

| | |
|---|---|
| 붐 | 45.3t |
| 지브 | 32.4t |

# ROUGH TERRAIN CRANE
# GR-1000N

CREVO 1000 G4

## 構 成 図

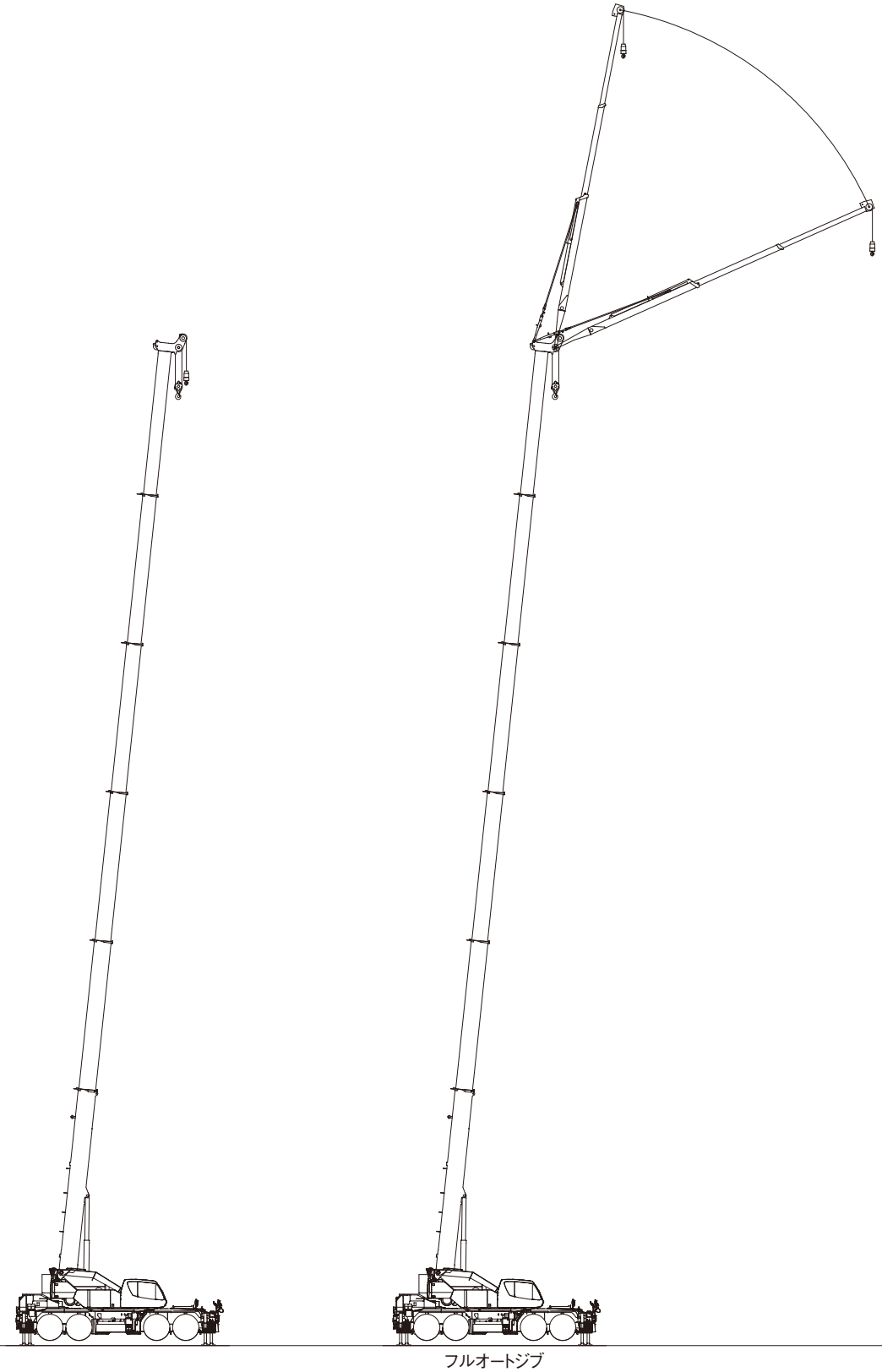

ブーム

フルオートジブ
FAJ

# INDEX


■ 諸　元　・クレーン、キャリヤ・・・・・・・・・・・・・・・・・・・・・・・・・・・・・・・・・P　2
■ 走　行　・公道走行状態・・・・・・・・・・・・・・・・・・・・・・・・・・・・・・・・・・・・P　3
　　　　　・最小直角通路幅・・・・・・・・・・・・・・・・・・・・・・・・・・・・・・・・・・・P　4
■ 搬　送　・搬送主要部品・・・・・・・・・・・・・・・・・・・・・・・・・・・・・・・・・・・・P　5
■ 設　置　・フック寸法（ブーム、フルオートジブ(FAJ)）・・・・・・・・・・・・・・・・・・・・・・・P　6
　　　　　・アウトリガ張出幅・テールスイング・・・・・・・・・・・・・・・・・・・・・・・・・・・P　7
■ 定格総荷重表　・ブーム・・・・・・・・・・・・・・・・・・・・・・・・・・・・・・・・・・・P　8
　　　　　・フルオートジブ(FAJ)・・・・・・・・・・・・・・・・・・・・・・・・・・・・・・・・・P 32
■ 作業半径-揚程図　・作業半径-揚程図・・・・・・・・・・・・・・・・・・・・・・・・・・・・・P 60
■ 作業領域　・作業領域図（標準性能）・・・・・・・・・・・・・・・・・・・・・・・・・・・・・P 64
　　　　　　（スマートチャート性能）・・・・・・・・・・・・・・・・・・・・・・・・・・・・・P 68


カウンタウエイトとアウトリガ張出幅の組合せによって次のように定格総荷重表を選定し該当ページを読み取ってください。

## ブーム

| | | カウンタウエイトあり（4.0 t） | カウンタウエイトなし（0.0 t） |
|---|---|---|---|
| SMART CHART | スマートチャート1(前方) | ● (P14) | ● (P22) |
| SMART CHART | スマートチャート1 | ● (P14) | ● (P22) |
| SMART CHART | スマートチャート2 | ● (P15) | ● (P23) |
| アウトリガ張出幅 | 7.8 m | ● (P16) | ● (P24) |
| アウトリガ張出幅 | 7.6 m | ● (P17) | ● (P25) |
| アウトリガ張出幅 | 7.2 m | ● (P18) | ● (P26) |
| アウトリガ張出幅 | 6.4 m | ● (P19) | ● (P27) |
| アウトリガ張出幅 | 5.38 m | ● (P20) | ● (P28) |
| アウトリガ張出幅 | 4.18 m | ● (P21) | ● (P29) |
| アウトリガ張出幅 | 2.36 m | — | ● (P30) |
| アウトリガ不使用 | 静止時/走行時 (前方・全周) | ● (P31) | ● (P31) |

## ブーム＋フルオートジブ(FAJ)

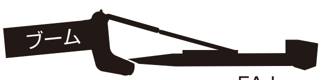


| | | カウンタウエイトあり（4.0 t） | カウンタウエイトなし（0.0 t） |
|---|---|---|---|
| SMART CHART | スマートチャート1 | ● (P36) | ● (P48) |
| SMART CHART | スマートチャート2 | ● (P37) | ● (P49) |
| アウトリガ張出幅 | 7.8 m | ● (P39) | ● (P51) |
| アウトリガ張出幅 | 7.6 m | ● (P40) | ● (P52) |
| アウトリガ張出幅 | 7.2 m | ● (P42) | ● (P54) |
| アウトリガ張出幅 | 6.4 m | ● (P43) | ● (P55) |
| アウトリガ張出幅 | 5.38 m | ● (P45) | ● (P57) |
| アウトリガ張出幅 | 4.18 m | ● (P46) | ● (P58) |

注）ー印の組合せでは、クレーン作業を行わないでください。

# 走　行

■公道走行状態

単位(mm)

● 41.295 t

（公道走行時の注意）

1. 公道走行状態で取り付け可能なフックは35tフックです。
2. 50tフック、重荷重用アタッチメントシーブ、カウンタウエイト装置は別送しなければなりません。

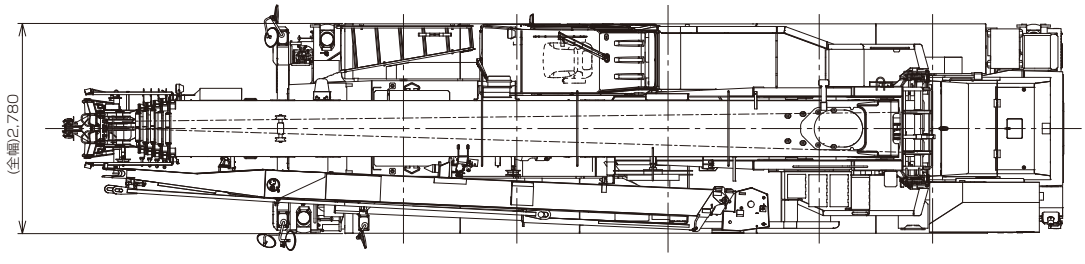


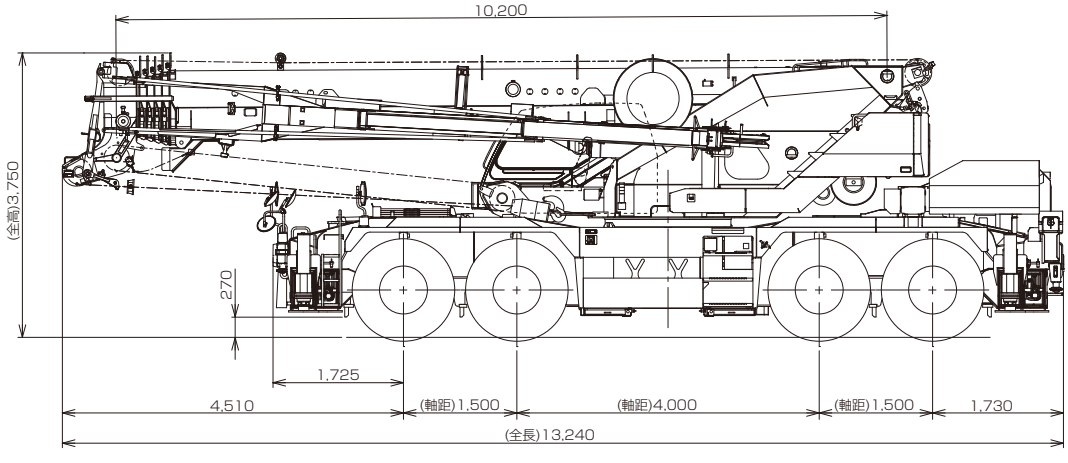


本図に記載のキャブサポートガード、作業用後方監視カメラ、LEDマーカーランプ、リモコンサーチライトはオプションです。

# 走　行

■最小直角通路幅

前4輪ステアリングで右折する場合

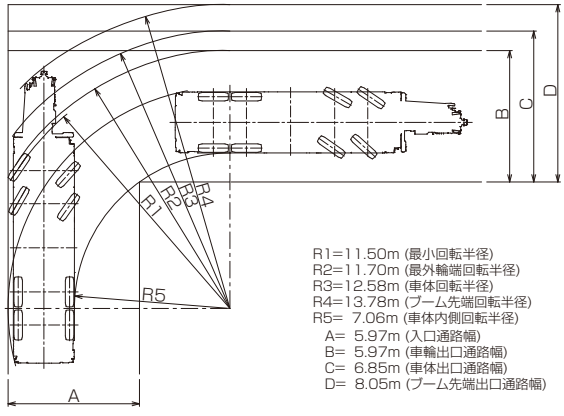


R1=11.50m (最小回転半径)
R2=11.70m (最外輪端回転半径)
R3=12.58m (車体回転半径)
R4=13.78m (ブーム先端回転半径)
R5= 7.06m (車体内側回転半径)
A= 5.97m (入口通路幅)
B= 5.97m (車輪出口通路幅)
C= 6.85m (車体出口通路幅)
D= 8.05m (ブーム先端出口通路幅)

8輪ステアリングで右折する場合

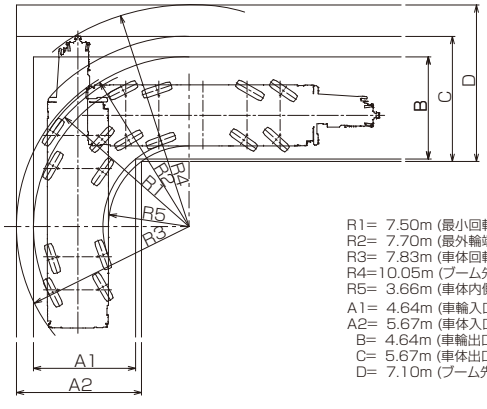


R1= 7.50m (最小回転半径)
R2= 7.70m (最外輪端回転半径)
R3= 7.83m (車体回転半径)
R4=10.05m (ブーム先端回転半径)
R5= 3.66m (車体内側回転半径)
A1= 4.64m (車輪入口通路幅)
A2= 5.67m (車体入口通路幅)
B= 4.64m (車輪出口通路幅)
C= 5.67m (車体出口通路幅)
D= 7.10m (ブーム先端出口通路幅)

後4輪ステアリングで右折する場合

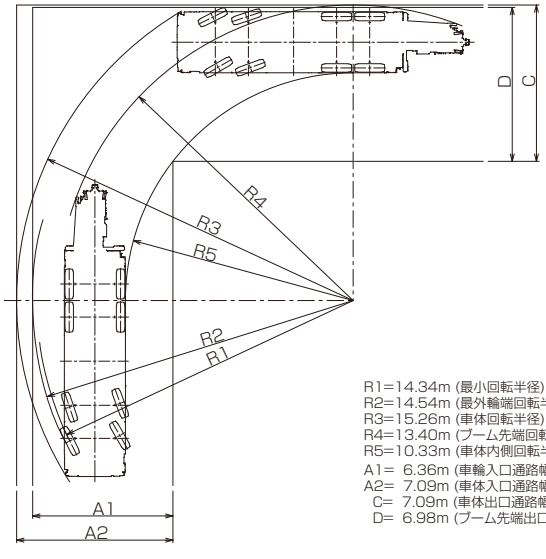


R1=14.34m (最小回転半径)
R2=14.54m (最外輪端回転半径)
R3=15.26m (車体回転半径)
R4=13.40m (ブーム先端回転半径)
R5=10.33m (車体内側回転半径)
A1= 6.36m (車輪入口通路幅)
A2= 7.09m (車体入口通路幅)
C= 7.09m (車体出口通路幅)
D= 6.98m (ブーム先端出口通路幅)

(注)上記数値は計算値です。

# 搬　送

■搬送主要部品

単位(mm)

カウンタウエイト

ウエイト（1）　240kg

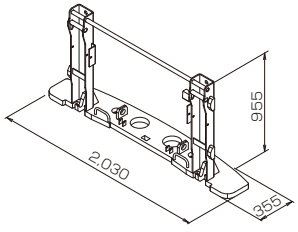


ウエイト（2）　1,870kg×2個

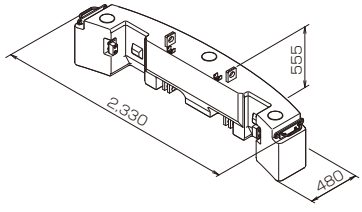


架装サポート　110kg

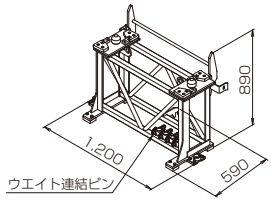


玉掛けワイヤ　3kg×2個

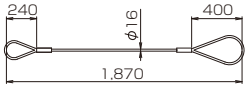


シャックル
1kg×2個

50ｔフック　430kg

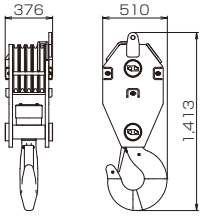


重荷重用アタッチメントシーブ

ベースブーム
取付け用　60kg×2個

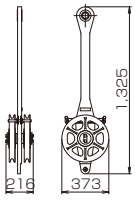


35tフック
取付け用　60kg

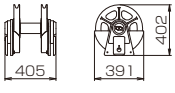

# 設　置

■フック寸法

単位(mm)

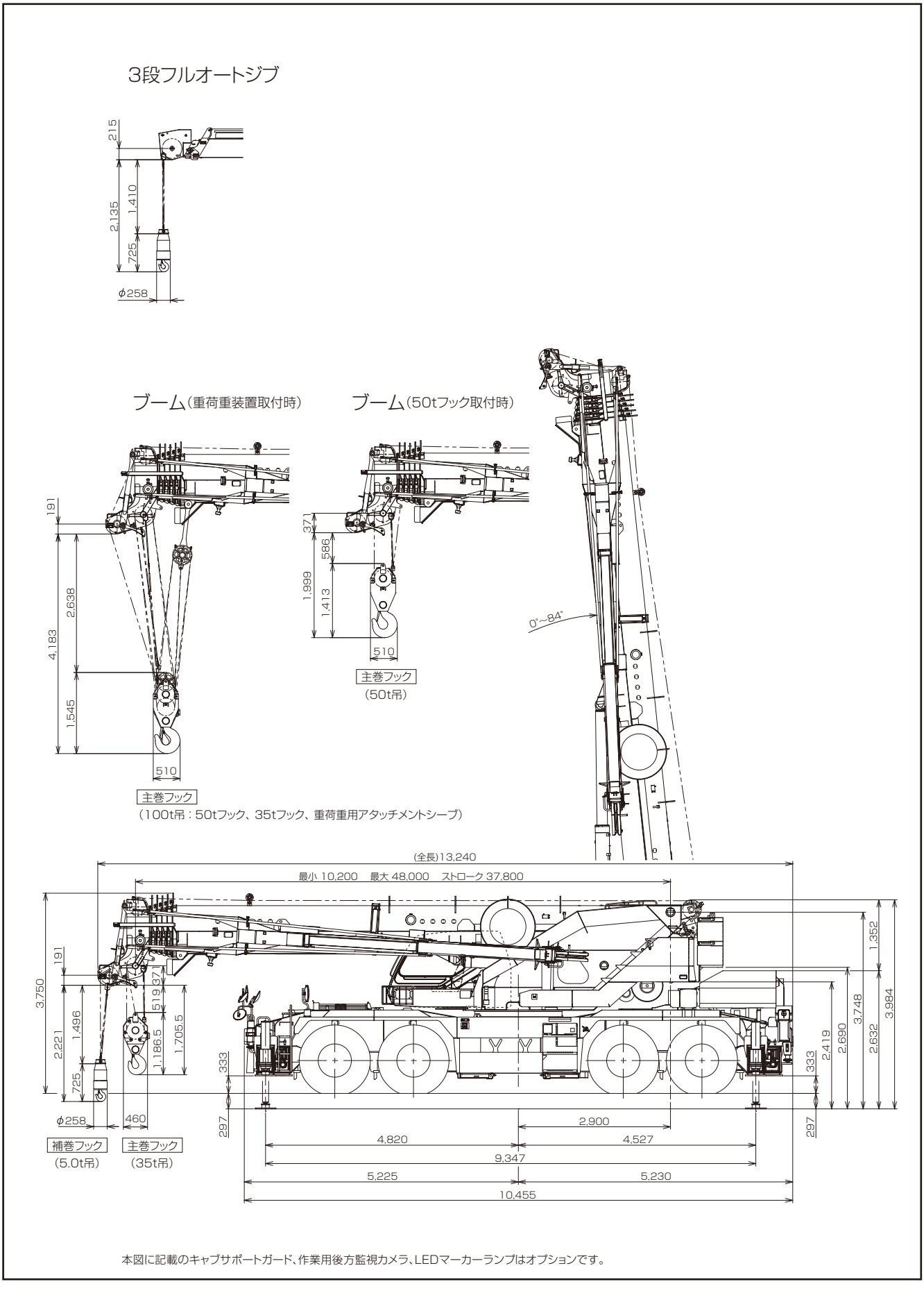


本図に記載のキャブサポートガード、作業用後方監視カメラ、LEDマーカーランプはオプションです。

# 設　置

■アウトリガ張出幅･テールスイング

単位(mm)

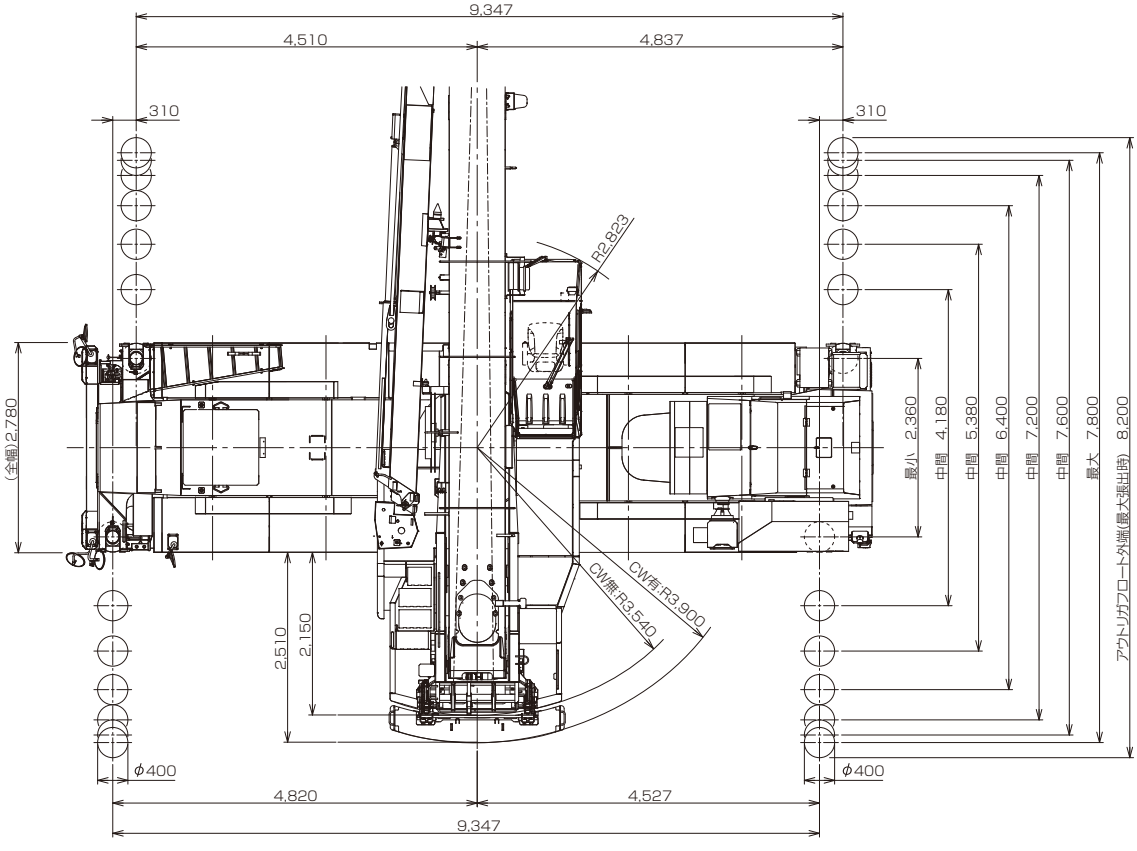


本図に記載の作業用後方監視カメラ、リモコンサーチライトはオプションです。

ラフテレーンクレーン

# GR-1000N-1

## ブーム

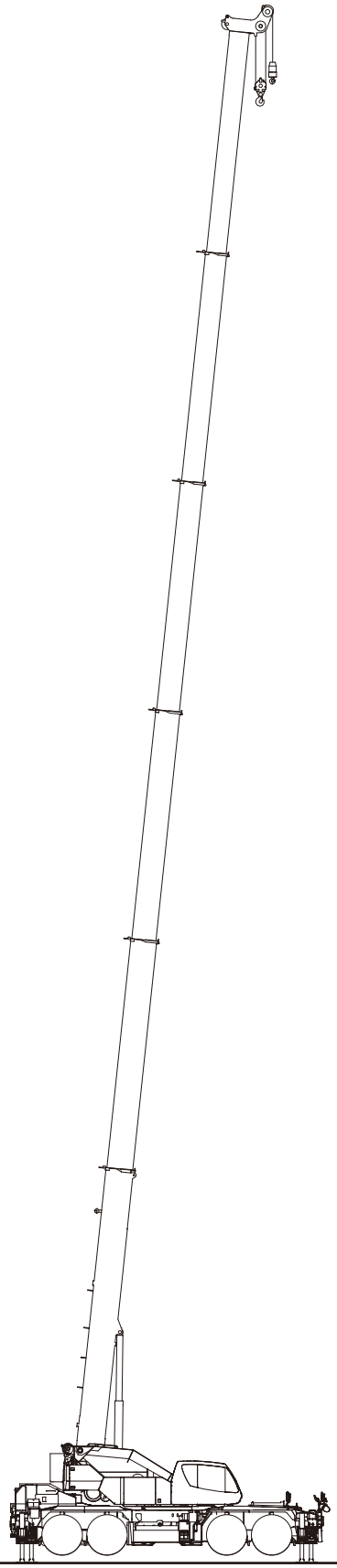

# ブーム定格総荷重表

## ■定格総荷重表注意事項　【 アウトリガ使用時 】

1. 定格総荷重は、水平堅土上においてクレーンを水平に設置した状態での値で、つり具と主巻フック質量（50tフック:430kg、35tフック:300kg）を含んだ値です。
   太線より上はクレーンの強度により定められ、下はクレーンの安定度によって定められています。
2. 作業半径は、ブームおよびジブのたわみを含んだ実際の値に基づいていますので、必ず作業半径を基準にしてください。
3. シングルトップ使用時のワイヤロープ巻掛本数は1本です。
   シングルトップの定格総荷重は、ブームの定格総荷重から50tフック使用時:320kg、35tフック使用時:190kgを差し引いた値とし、つり具と補巻フック質量（110kg）を含んだ値で、かつ限度は5.0tです。
4. 高速巻き下げは、フックのみを降下するときに使用してください。また、急激なレバー操作は避けてください。
5. 各ブーム長さにおける標準フックとワイヤロープ標準巻掛本数はブームの各定格総荷重表中最下段に記載しています。
   ただし、この掛数以外で使用する場合は、ロープ1本当り主巻5.0t以下、補巻5.0t以下としてください。
   また、35tフックは7本掛け（最大荷重35t）時ブーム長さ17.2mまで、6本掛け（最大荷重30t）時ブーム長さ20.7mまでで使用できます。
6. 側方域でのつり上げ性能は、アウトリガ張出幅によって異なります。張出幅に応じた性能で作業をしてください。
   また、前方･後方域でのつり上げ性能は「アウトリガ最大張出」の定格総荷重ですが、フロントアウトリガ張出幅とリヤアウトリガ張出幅の組み合わせによってその前方･後方域の範囲（角度a、b）が異なります。

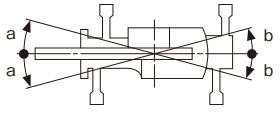


| 前方域 | | | | | | | | | |
|---|---|---|---|---|---|---|---|---|---|
| 角度 a° | | | フロントアウトリガ張出状態 | | | | | | |
| | | | 最大張出 | 中間張出 | | | | | 最小張出 |
| | | | 7.8m | 7.6m | 7.2m | 6.4m | 5.38m | 4.18m | 2.36m |
| リヤアウトリガ張出状態 | 最大張出 | 7.8m | 90 | 75 | 65 | 55 | 40 | 10 | 5 |
| | 中間張出 | 7.6m | 75 | 70 | 65 | 50 | 40 | 10 | 5 |
| | | 7.2m | 65 | 65 | 60 | 50 | 20 | 10 | 5 |
| | | 6.4m | 60 | 55 | 55 | 45 | 15 | 10 | 5 |
| | | 5.38m | 50 | 50 | 45 | 25 | 15 | 10 | 5 |
| | | 4.18m | 45 | 45 | 25 | 20 | 15 | 5 | 5 |
| | 最小張出 | 2.36m | 25 | 20 | 20 | 15 | 10 | 5 | 5 |

| 後方域 | | | | | | | | | |
|---|---|---|---|---|---|---|---|---|---|
| 角度 b° | | | フロントアウトリガ張出状態 | | | | | | |
| | | | 最大張出 | 中間張出 | | | | | 最小張出 |
| | | | 7.8m | 7.6m | 7.2m | 6.4m | 5.38m | 4.18m | 2.36m |
| リヤアウトリガ張出状態 | 最大張出 | 7.8m | 90 | 75 | 70 | 30 | 25 | 20 | 15 |
| | 中間張出 | 7.6m | 75 | 70 | 35 | 25 | 25 | 20 | 15 |
| | | 7.2m | 30 | 30 | 25 | 25 | 20 | 20 | 15 |
| | | 6.4m | 20 | 20 | 20 | 20 | 15 | 15 | 10 |
| | | 5.38m | 15 | 15 | 10 | 10 | 10 | 10 | 10 |
| | | 4.18m | 5 | 5 | 5 | 5 | 5 | 5 | 5 |
| | 最小張出 | 2.36m | 5 | 5 | 5 | 5 | 5 | − | − |

## ブーム定格総荷重表

7. スマートチャート性能選択時は前方･後方域でスマートチャート1性能･スマートチャート2性能で作業が行えます。
スマートチャート性能は、フロントアウトリガ張出幅とリヤアウトリガ張出幅の組み合わせによって、スマートチャート1性能で作業が行える前方の範囲（角度c）、スマートチャート2性能で作業が行える前方の範囲（角度d）および後方の範囲（角度e）が異なります。スマートチャート1（前方）のクレーン作業は、AMLの「前方位置シンボル」が点灯している時に行ってください。前方の範囲はブームがキャリヤの前方2°以内です。また側方域でのつり上げ性能は、アウトリガ張出幅に応じた標準性能となります。

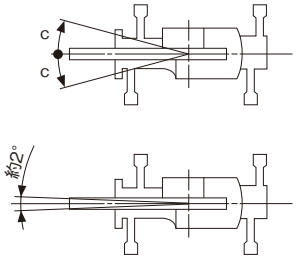


| 前 方 域（スマートチャート1性能） | | | | | | | | | |
|---|---|---|---|---|---|---|---|---|---|
| 角度 C° | | | フロントアウトリガ張出状態 | | | | | | |
| | | | 最大張出 | 中間張出 | | | | | 最小張出 |
| | | | 7.8m | 7.6m | 7.2m | 6.4m | 5.38m | 4.18m | 2.36m |
| リヤアウトリガ張出状態 | 最大張出 | 7.8m | 35 | 35 | 30 | 25 | 20 | 5 | 5 |
| | 中間張出 | 7.6m | 35 | 35 | 30 | 25 | 20 | 5 | 5 |
| | | 7.2m | 35 | 30 | 30 | 25 | 15 | 5 | 5 |
| | | 6.4m | 30 | 30 | 25 | 20 | 10 | 5 | 5 |
| | | 5.38m | 25 | 25 | 25 | 20 | 10 | 5 | 5 |
| | | 4.18m | 20 | 20 | 20 | 15 | 10 | 5 | 5 |
| | 最小張出 | 2.36m | 15 | 15 | 15 | 15 | 5 | 5 | 5 |

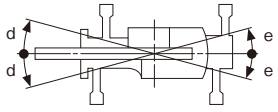


| 前 方 域（スマートチャート2性能） | | | | | | | | | |
|---|---|---|---|---|---|---|---|---|---|
| 角度 d° | | | フロントアウトリガ張出状態 | | | | | | |
| | | | 最大張出 | 中間張出 | | | | | 最小張出 |
| | | | 7.8m | 7.6m | 7.2m | 6.4m | 5.38m | 4.18m | 2.36m |
| リヤアウトリガ張出状態 | 最大張出 | 7.8m | 50 | 50 | 50 | 45 | 35 | 10 | 5 |
| | 中間張出 | 7.6m | 50 | 50 | 50 | 45 | 35 | 10 | 5 |
| | | 7.2m | 50 | 50 | 50 | 40 | 15 | 10 | 5 |
| | | 6.4m | 50 | 50 | 45 | 40 | 15 | 10 | 5 |
| | | 5.38m | 50 | 45 | 45 | 20 | 15 | 10 | 5 |
| | | 4.18m | 45 | 45 | 25 | 20 | 15 | 5 | 5 |
| | 最小張出 | 2.36m | 20 | 20 | 20 | 15 | 10 | 5 | 5 |

| 後 方 域（スマートチャート2性能） | | | | | | | | | |
|---|---|---|---|---|---|---|---|---|---|
| 角度 e° | | | フロントアウトリガ張出状態 | | | | | | |
| | | | 最大張出 | 中間張出 | | | | | 最小張出 |
| | | | 7.8m | 7.6m | 7.2m | 6.4m | 5.38m | 4.18m | 2.36m |
| リヤアウトリガ張出状態 | 最大張出 | 7.8m | 25 | 25 | 25 | 25 | 25 | 20 | 15 |
| | 中間張出 | 7.6m | 25 | 25 | 25 | 25 | 20 | 20 | 15 |
| | | 7.2m | 25 | 25 | 25 | 20 | 20 | 20 | 15 |
| | | 6.4m | 20 | 20 | 15 | 15 | 15 | 15 | 10 |
| | | 5.38m | 10 | 10 | 10 | 10 | 10 | 10 | 10 |
| | | 4.18m | 5 | 5 | 5 | 5 | 5 | 5 | 5 |
| | 最小張出 | 2.36m | 5 | 5 | 5 | 5 | 5 | – | – |

定格総荷重表中のシンボル、記号の説明

| | | | |
|---|---|---|---|
| MB | ブームの定格総荷重を示します。 | t JPN | 定格総荷重の単位を示します。 |
| | カウンタウエイト（C/W）の質量を示します。 | m | ブーム長さを示します。 |
| | アウトリガ張出幅を示します。 | m | 作業半径を示します。 |
| 360° | 吊上げ可能な旋回範囲を示します。 | % | ブーム伸縮状態 ( 伸縮割合 %) を示します。<br>IDはブーム伸縮状態に対応する番号を示します。 |
| SMART CHART スマートチャート1(前方) | スマートチャート１（前方）の場合、前方限定を示します。 | | Bピン（ブーム固定ピン）を挿入していないときの定格総荷重の上限を示します。 |
| SMART CHART スマートチャート1 | スマートチャート１の場合、スマートチャート１性能で作業可能であることを示します。 | | 無負荷状態で作動可能なブーム起伏角度範囲を示します。 |
| | | | 標準巻掛本数を示します。 |
| SMART CHART スマートチャート2 | スマートチャート２の場合、スマートチャート２性能で作業可能であることを示します。 | | 標準フックを示します。 |

## ■定格総荷重表注意事項　【 アウトリガ不使用時 】

1. 定格総荷重は、水平堅土上においてタイヤのエア圧が規定圧（900kPa{9.00kgf/cm²}）で、かつサスペンションシリンダを最縮小した場合の値で、ブーム作業時はつり具と主巻フック質量（50tフック:430kg、35tフック:300kg）を含んだ値です。太線より上はクレーンの強度によって定められ、下は安定度によって定められています。実際の作業では、地盤、作業状態等を考慮して使用してください。
2. 作業半径は、ブームおよびタイヤのたわみを含んだ実際の値に基づいていますので、必ず作業半径を基準にしてください。
3. 各ブーム長さにおけるフックのワイヤロープ標準巻掛本数は下表のとおりです。ただし、この掛数以外で使用する場合は、ロープ1本当り主巻5.0t以下、補巻5.0t以下としてください。

| ブーム長さ | 10.2m | 13.7m | 17.2m | シングルトップ |
|---|---|---|---|---|
| 巻 掛 本 数 | 3 | 3 | 3 | 1 |

4. 「前方」のクレーン作業は、AMLの「前方位置シンボル」が点灯しているときに行ってください。
前方の範囲は、ブームがキャリヤの前方2°以内です。

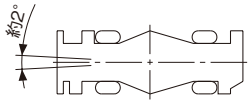


5. シングルトップの定格総荷重は、ブームの定格総荷重より50tフック使用時:320kg、35tフック使用時:190kgを差し引いた値とし、つり具と補巻フック質量（110kg）を含んだ値で、かつ限度は5.0tです。
6. 高速巻き下げ作業、ブーム長さが17.2mを超えるブーム作業（カウンタウエイト装着時は10.2mを超えるブーム作業）およびジブの使用はしないでください。
7. つり荷走行は、「駆動モード切換」スイッチを「6WD低速走行」にし、シフトスイッチを1速にして行ってください。
8. つり荷走行は、旋回ブレーキをかけ、荷が振れないように地面近くに保持し、1.6km/h以下で行ってください。特に急ハンドル、急発進、急ブレーキは避けてください。
9. つり荷走行中には、クレーン作業を行わないでください。

定格総荷重表中のシンボル、記号の説明

| | | | |
|---|---|---|---|
| MB | ブームの定格総荷重を示します。 | m | ブーム長さを示します。 |
| | カウンタウエイト（C/W）の質量を示します。 | m | 作業半径を示します。 |
| アウトリガ不使用<br>静止 | 静止時を示します。 | % | ブーム伸縮状態 ( 伸縮割合 %) を示します。<br>IDはブーム伸縮状態に対応する番号を示します。 |
| アウトリガ不使用<br>走行（1.6km/h以下） | 走行時（1.6km/h 以下）を示します。 | | B ピン（ブーム固定ピン）を挿入していないときの定格総荷重の上限を示します。 |
| 360 ° | 吊上げ可能な旋回範囲を示します。 | | 無負荷状態で作動可能なブーム起伏角度範囲を示します。 |
| 前方 | 前方の場合、前方限定を示します。 | | 標準巻掛本数を示します。 |
| t<br>JPN | 定格総荷重の単位を示します。 | | 標準フックを示します。 |

# ブーム

## ■ 定格総荷重表の見方

1. アウトリガ張出幅とカウンタウエイトの質量に応じた性能を選択します。
2. ブーム長さとIDの欄を見ます。
3. 作業半径の欄を見ます。
4. ブーム長さ、IDと作業半径が交差するところが定格総荷重です。

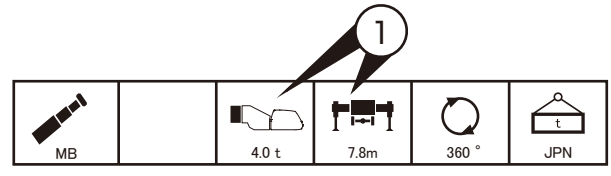


| m | 10.2 | 13.7 | 13.7 | 17.2 | 17.2 | 17.2 | 17.2 | 20.7 | 20.7 | 20.7 | 20.7 | 24.2 | 24.2 | 24.2 | m |
|---|---|---|---|---|---|---|---|---|---|---|---|---|---|---|---|
| 1.6 | 75.00 | | | | | | | | | | | | | | 1.6 |
| 2.0 | 75.00 | 45.00 | 25.00 | 45.00 | 40.00 | 25.00 | 21.60 | 40.00 | 40.00 | 25.00 | 23.00 | 35.00 | 25.00 | 19.90 | 2.0 |
| 2.5 | 70.90 | 45.00 | 25.00 | 45.00 | 40.00 | 25.00 | 19.90 | 40.00 | 40.00 | 25.00 | 21.40 | 35.00 | 25.00 | 18.90 | 2.5 |
| 3.0 | 63.60 | 45.00 | 25.00 | 45.00 | 40.00 | 25.00 | 18.50 | 40.00 | 40.00 | 25.00 | 20.10 | 35.00 | 25.00 | 17.90 | 3.0 |
| 3.5 | 57.40 | 45.00 | 24.10 | 45.00 | 40.00 | 25.00 | 17.30 | 40.00 | 40.00 | 25.00 | 18.90 | 35.00 | 25.00 | 16.80 | 3.5 |
| 4.0 | 52.10 | 45.00 | 22.80 | 42.90 | 40.00 | 25.00 | 16.20 | 38.60 | 40.00 | 25.00 | 17.70 | 33.80 | 25.00 | 15.70 | 4.0 |
| 4.5 | 47.60 | 45.00 | 21.70 | 40.20 | 40.00 | 23.80 | 15.20 | 36.30 | 40.00 | 25.00 | 16.60 | 32.40 | 25.00 | 14.70 | 4.5 |
| 5.0 | 43.60 | 43.50 | 20.60 | 37.70 | 40.00 | 22.50 | 14.40 | 34.30 | 39.50 | 24.70 | 15.70 | 30.60 | 25.00 | 13.90 | 5.0 |
| 5.5 | 40.20 | 40.10 | 19.70 | 35.50 | 40.00 | 21.30 | 13.60 | 32.50 | 37.60 | 23.50 | 14.80 | 28.90 | 24.90 | 13.10 | 5.5 |
| 6.0 | 37.20 | 37.10 | 18.90 | 33.60 | 37.30 | 20.30 | 12.90 | 30.90 | 35.90 | 22.40 | 14.10 | 27.40 | 23.90 | 12.40 | 6.0 |
| 6.5 | 34.60 | 34.40 | 18.10 | 31.80 | 34.70 | 19.[illegible] | 12.30 | 29.40 | 34.40 | 21.50 | 13.40 | 26.10 | 23.00 | 11.80 | 6.5 |
| 7.0 | 32.30 | 32.10 | 17.40 | 30.20 | 32.30 | [illegible] | 11.70 | 28.00 | 32.60 | 20.60 | 12.70 | 24.90 | 22.10 | 11.20 | 7.0 |
| 8.0 | | 27.70 | 16.20 | 27.40 | 27.90 | [illegible] | 10.70 | 25.40 | 28.30 | 19.00 | 11.60 | 22.70 | 20.50 | 10.20 | 8.0 |
| 9.0 | | 23.40 | 15.20 | 23.10 | 23.70 | [illegible] | 9.95 | 23.20 | 24.20 | 17.50 | 10.70 | 20.90 | 19.20 | 9.40 | 9.0 |
| 10.0 | | 19.00 | 14.50 | 18.70 | 19.40 | 14.60 | 9.20 | 19.10 | 19.90 | 16.30 | 9.95 | 19.30 | 18.00 | 8.65 | 10.0 |
| 11.0 | | | | 15.40 | 16.10 | 13.60 | 8.60 | 15.80 | 16.50 | 15.20 | 9.25 | 16.20 | 16.80 | 8.05 | 11.0 |
| 12.0 | | | | 13.00 | 13.60 | 12.80 | 8.10 | 13.30 | 14.00 | 14.20 | 8.65 | 13.70 | 15.40 | 7.50 | 12.0 |
| 14.0 | | | | 9.60 | 10.10 | 11.60 | 7.30 | 9.85 | 10.50 | 11.90 | 7.70 | 10.20 | 11.80 | 6.60 | 14.0 |
| 16.0 | | | | | | | | 7.50 | 8.15 | 9.45 | 6.90 | 7.90 | 9.35 | 5.90 | 16.0 |
| 18.0 | | | | | | | | | | | | 6.20 | 7.60 | 5.30 | 18.0 |
| 20.0 | | | | | | | | | | | | 4.95 | 6.30 | 4.85 | 20.0 |
| 21.0 | | | | | | | | | | | | 4.50 | 5.80 | 4.65 | 21.0 |
| 22.0 | | | | | | | | | | | | | | | 22.0 |
| 24.0 | | | | | | | | | | | | | | | 24.0 |
| 26.0 | | | | | | | | | | | | | | | 26.0 |
| 28.0 | | | | | | | | | | | | | | | 28.0 |
| 30.0 | | | | | | | | | | | | | | | 30.0 |
| 31.0 | | | | | | | | | | | | | | | 31.0 |
| 32.0 | | | | | | | | | | | | | | | 32.0 |
| 34.0 | | | | | | | | | | | | | | | 34.0 |
| 35.0 | | | | | | | | | | | | | | | 35.0 |
| 36.0 | | | | | | | | | | | | | | | 36.0 |
| 38.0 | | | | | | | | | | | | | | | 38.0 |
| 40.0 | | | | | | | | | | | | | | | 40.0 |
| 42.0 | | | | | | | | | | | | | | | 42.0 |
| 44.0 | | | | | | | | | | | | | | | 44.0 |
| 1 | 0 | 46 | 0 | 92 | 46 | 0 | 0 | 92 | 46 | 0 | 0 | 92 | 0 | 0 | 1 |
| 2 | 0 | 0 | 0 | 0 | 46 | 0 | 0 | 46 | 46 | 0 | 0 | 46 | 46 | 0 | 2 |
| 3 | 0 | 0 | 0 | 0 | 0 | 0 | 0 | 0 | 46 | 46 | 0 | 46 | 46 | 0 | 3 |
| 4 | 0 | 0 | 0 | 0 | 0 | 46 | 0 | 0 | 0 | 46 | 46 | 0 | 46 | 92 | 4 |
| 5 | 0 | 0 | 46 | 0 | 0 | 46 | 92 | 0 | 0 | 46 | 92 | 0 | 46 | 92 | 5 |
| ID | 1 | 23 | 2 | 24 | 25 | 12 | 3 | 26 | 27 | 13 | 4 | 28 | 14 | 5 | ID |
| t | 20.7 | 24.3 | 19.9 | 20.5 | 24.0 | 19.1 | 17.8 | 20.6 | 23.6 | 18.0 | 18.8 | 20.5 | 24.2 | 17.3 | t |
| [DEG] | 0～84 | 0～84 | 0～84 | 0～84 | 0～84 | [illegible] | 0～84 | 0～84 | 0～84 | 0～84 | 0～84 | 0～84 | 0～84 | 0～84 | [DEG] |
| | 20 | 9 | 5 | 9 | 8 | [illegible] | 5 | 8 | 8 | 5 | 5 | 7 | 5 | 4 | |
| | 重荷重装置 | 50t | 35t | 50t | 50t | 35t | 35t | 50t | 50t | 35t | 35t | 50t | 35t | 35t | |

## ■性能ブロック図

性能ブロックはブームの伸縮操作だけでブーム伸縮状態を変更できる一連のIDをまとめたものです。
同じブロック内であればブームの伸縮状態の変更が容易に行えます。

IDはブーム伸縮状態に対応する番号を示します。
ブームの伸縮割合の組み合わせによってブーム伸縮状態が異なります。
同じブーム長さであってもブームの伸縮割合が変われば IDが変わります。

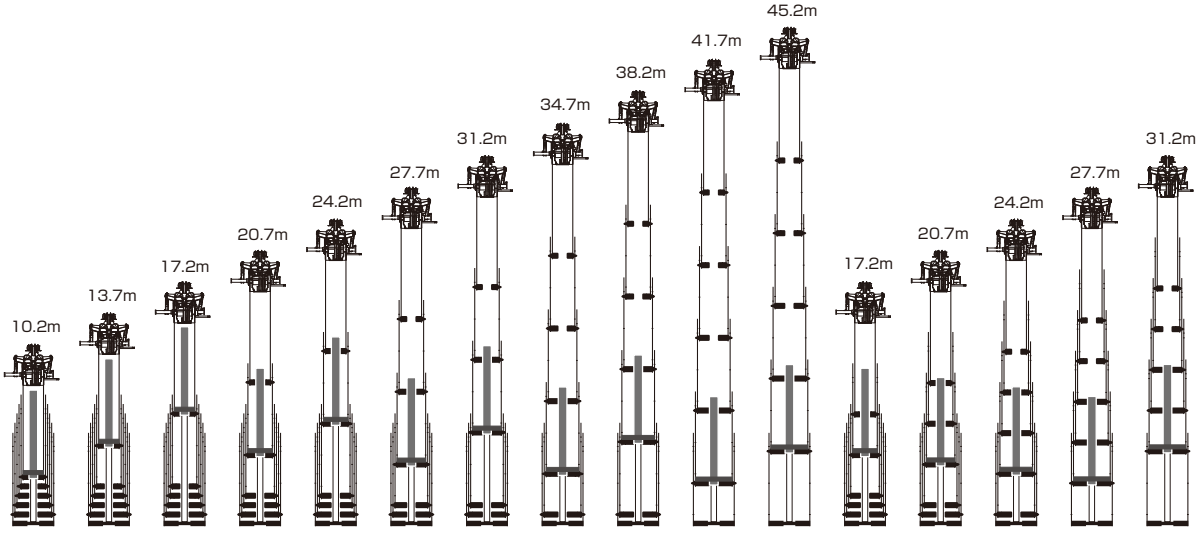


| 性能ブロック | 1 | | | | | | | | | | | 2 | | | | |
|---|---|---|---|---|---|---|---|---|---|---|---|---|---|---|---|---|
| ID | 1 | 2 | 3 | 4 | 5 | 6 | 7 | 8 | 9 | 10 | 11 | 12 | 13 | 14 | 15 | 16 |

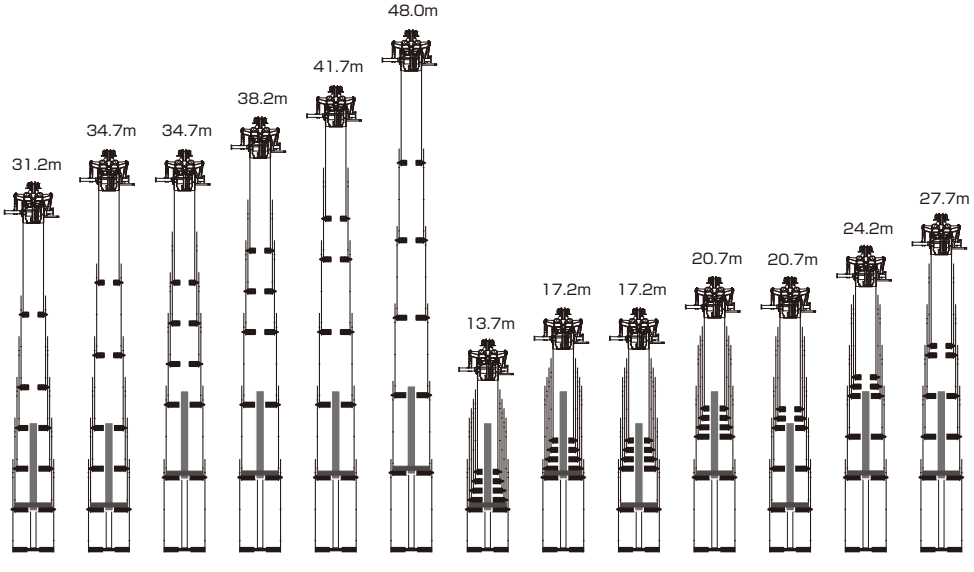


| 性能ブロック | 3 | 4 | 5 | 6 | 7 | 8 | 9 | | 10 | | 11 | | 12 |
|---|---|---|---|---|---|---|---|---|---|---|---|---|---|
| ID | 17 | 18 | 19 | 20 | 21 | 22 | 23 | 24 | 25 | 26 | 27 | 28 | 29 |

# ブーム

| MB | | 4.0 t |
|---|---|---|
| スマートチャート1（前方） | SMART CHART | JPN |

| m | 10.2 |
|---|---|
| 1.6 | 100.00 |
| 2.0 | 84.00 |
| 2.5 | 74.10 |
| 3.0 | 66.50 |
| 3.5 | 60.10 |
| 4.0 | 54.70 |
| 4.5 | 50.00 |
| 5.0 | 45.90 |
| 5.5 | 42.40 |
| 6.0 | 38.50 |
| 6.5 | 35.30 |
| 7.0 | 32.50 |
| 8.0 | |
| 9.0 | |
| 10.0 | |
| 11.0 | |
| 12.0 | |
| 14.0 | |
| 16.0 | |
| 18.0 | |
| 20.0 | |
| 21.0 | |
| 22.0 | |
| 24.0 | |
| 26.0 | |
| 28.0 | |
| 30.0 | |
| 31.0 | |
| 32.0 | |
| 34.0 | |
| 35.0 | |
| 36.0 | |
| 38.0 | |
| 40.0 | |
| 42.0 | |
| 44.0 | |
| 1 | 0 |
| 2 | 0 |
| 3 | 0 |
| 4 | 0 |
| 5 | 0 |
| ID | 1 |
| t | 20.7 |
| [DEG] | 0～84 |
| | 20 |
| | 重荷重装置 |

| MB | | 4.0 t | スマートチャート1 | SMART CHART | JPN |
|---|---|---|---|---|---|

| m | 10.2 | 13.7 | 13.7 | 17.2 | 17.2 | 17.2 | 17.2 | 20.7 | 20.7 | 20.7 | 20.7 | 24.2 | 24.2 | 24.2 | m |
|---|---|---|---|---|---|---|---|---|---|---|---|---|---|---|---|
| 1.6 | 75.00 | | | | | | | | | | | | | | 1.6 |
| 2.0 | 75.00 | 45.00 | 25.00 | 45.00 | 40.00 | 25.00 | 21.60 | 40.00 | 40.00 | 25.00 | 23.00 | 35.00 | 25.00 | 19.90 | 2.0 |
| 2.5 | 74.10 | 45.00 | 25.00 | 45.00 | 40.00 | 25.00 | 19.90 | 40.00 | 40.00 | 25.00 | 21.40 | 35.00 | 25.00 | 18.90 | 2.5 |
| 3.0 | 66.50 | 45.00 | 25.00 | 45.00 | 40.00 | 25.00 | 18.50 | 40.00 | 40.00 | 25.00 | 20.10 | 35.00 | 25.00 | 17.90 | 3.0 |
| 3.5 | 60.10 | 45.00 | 24.10 | 45.00 | 40.00 | 25.00 | 17.30 | 40.00 | 40.00 | 25.00 | 18.90 | 35.00 | 25.00 | 16.80 | 3.5 |
| 4.0 | 54.70 | 45.00 | 22.80 | 42.90 | 40.00 | 25.00 | 16.20 | 38.60 | 40.00 | 25.00 | 17.70 | 33.80 | 25.00 | 15.70 | 4.0 |
| 4.5 | 50.00 | 45.00 | 21.70 | 40.20 | 40.00 | 23.80 | 15.20 | 36.30 | 40.00 | 25.00 | 16.60 | 32.40 | 25.00 | 14.70 | 4.5 |
| 5.0 | 45.90 | 45.00 | 20.60 | 37.70 | 40.00 | 22.50 | 14.40 | 34.30 | 39.50 | 24.70 | 15.70 | 30.60 | 25.00 | 13.90 | 5.0 |
| 5.5 | 42.40 | 42.20 | 19.70 | 35.50 | 40.00 | 21.30 | 13.60 | 32.50 | 37.60 | 23.50 | 14.80 | 28.90 | 24.90 | 13.10 | 5.5 |
| 6.0 | 38.50 | 38.30 | 18.90 | 33.60 | 38.60 | 20.30 | 12.90 | 30.90 | 35.90 | 22.40 | 14.10 | 27.40 | 23.90 | 12.40 | 6.0 |
| 6.5 | 35.30 | 35.10 | 18.10 | 31.80 | 35.30 | 19.30 | 12.30 | 29.40 | 34.40 | 21.50 | 13.40 | 26.10 | 23.00 | 11.80 | 6.5 |
| 7.0 | 32.50 | 32.30 | 17.40 | 30.20 | 32.50 | 18.50 | 11.70 | 28.00 | 32.80 | 20.60 | 12.70 | 24.90 | 22.10 | 11.20 | 7.0 |
| 8.0 | | 27.70 | 16.20 | 27.40 | 27.90 | 16.90 | 10.70 | 25.40 | 28.30 | 19.00 | 11.60 | 22.70 | 20.50 | 10.20 | 8.0 |
| 9.0 | | 24.10 | 15.20 | 23.90 | 24.40 | 15.60 | 9.95 | 23.20 | 24.70 | 17.50 | 10.70 | 20.90 | 19.20 | 9.40 | 9.0 |
| 10.0 | | 21.30 | 14.50 | 21.10 | 21.50 | 14.60 | 9.20 | 21.30 | 21.80 | 16.30 | 9.95 | 19.30 | 18.00 | 8.65 | 10.0 |
| 11.0 | | | | 18.80 | 19.20 | 13.60 | 8.60 | 19.00 | 19.50 | 15.20 | 9.25 | 18.00 | 16.80 | 8.05 | 11.0 |
| 12.0 | | | | 16.80 | 17.20 | 12.80 | 8.10 | 17.00 | 17.50 | 14.20 | 8.65 | 16.80 | 15.80 | 7.50 | 12.0 |
| 14.0 | | | | 13.00 | 13.70 | 11.60 | 7.30 | 13.30 | 14.10 | 12.70 | 7.70 | 13.80 | 14.20 | 6.60 | 14.0 |
| 16.0 | | | | | | | | 10.40 | 11.20 | 11.40 | 6.90 | 10.90 | 12.60 | 5.90 | 16.0 |
| 18.0 | | | | | | | | | | | | 8.75 | 10.40 | 5.30 | 18.0 |
| 20.0 | | | | | | | | | | | | 7.15 | 8.75 | 4.85 | 20.0 |
| 21.0 | | | | | | | | | | | | 6.50 | 8.10 | 4.65 | 21.0 |
| 22.0 | | | | | | | | | | | | | | | 22.0 |
| 24.0 | | | | | | | | | | | | | | | 24.0 |
| 26.0 | | | | | | | | | | | | | | | 26.0 |
| 28.0 | | | | | | | | | | | | | | | 28.0 |
| 30.0 | | | | | | | | | | | | | | | 30.0 |
| 31.0 | | | | | | | | | | | | | | | 31.0 |
| 32.0 | | | | | | | | | | | | | | | 32.0 |
| 34.0 | | | | | | | | | | | | | | | 34.0 |
| 35.0 | | | | | | | | | | | | | | | 35.0 |
| 36.0 | | | | | | | | | | | | | | | 36.0 |
| 38.0 | | | | | | | | | | | | | | | 38.0 |
| 40.0 | | | | | | | | | | | | | | | 40.0 |
| 42.0 | | | | | | | | | | | | | | | 42.0 |
| 44.0 | | | | | | | | | | | | | | | 44.0 |
| 1 | 0 | 46 | 0 | 92 | 46 | 0 | 0 | 92 | 46 | 0 | 0 | 92 | 0 | 0 | 1 |
| 2 | 0 | 0 | 0 | 0 | 46 | 0 | 0 | 46 | 46 | 0 | 0 | 46 | 46 | 0 | 2 |
| 3 | 0 | 0 | 0 | 0 | 0 | 0 | 0 | 0 | 46 | 46 | 0 | 46 | 46 | 0 | 3 |
| 4 | 0 | 0 | 0 | 0 | 0 | 46 | 0 | 0 | 0 | 46 | 46 | 0 | 46 | 92 | 4 |
| 5 | 0 | 0 | 46 | 0 | 0 | 46 | 92 | 0 | 0 | 46 | 92 | 0 | 46 | 92 | 5 |
| ID | 1 | 23 | 2 | 24 | 25 | 12 | 3 | 26 | 27 | 13 | 4 | 28 | 14 | 5 | ID |
| t | 20.7 | 24.3 | 19.9 | 20.5 | 24.0 | 19.1 | 17.8 | 20.6 | 23.6 | 18.0 | 18.8 | 20.5 | 24.2 | 17.3 | t |
| [DEG] | 0～84 | 0～84 | 0～84 | 0～84 | 0～84 | 0～84 | 0～84 | 0～84 | 0～84 | 0～84 | 0～84 | 0～84 | 0～84 | 0～84 | [DEG] |
| | 20 | 9 | 5 | 9 | 8 | 5 | 5 | 8 | 8 | 5 | 5 | 7 | 5 | 4 | |
| | 重荷重装置 | 50t | 35t | 50t | 50t | 35t | 35t | 50t | 50t | 35t | 35t | 50t | 35t | 35t | |

| m | 27.7 | 27.7 | 27.7 | 31.2 | 31.2 | 31.2 | 34.7 | 34.7 | 34.7 | 38.2 | 38.2 | 41.7 | 41.7 | 45.2 | 48.0 | m |
|---|---|---|---|---|---|---|---|---|---|---|---|---|---|---|---|---|
| 1.6 | | | | | | | | | | | | | | | | 1.6 |
| 2.0 | | | | | | | | | | | | | | | | 2.0 |
| 2.5 | 25.00 | 25.00 | 18.40 | | | | | | | | | | | | | 2.5 |
| 3.0 | 25.00 | 25.00 | 17.60 | 20.00 | 20.00 | 16.70 | | | | | | | | | | 3.0 |
| 3.5 | 25.00 | 25.00 | 16.90 | 20.00 | 19.80 | 16.10 | 18.40 | 15.00 | 14.70 | | | | | | | 3.5 |
| 4.0 | 25.00 | 25.00 | 16.20 | 20.00 | 19.20 | 15.60 | 18.40 | 15.00 | 14.70 | 15.00 | 12.50 | | | | | 4.0 |
| 4.5 | 25.00 | 25.00 | 15.60 | 20.00 | 18.60 | 15.10 | 18.40 | 14.90 | 14.40 | 15.00 | 12.50 | | | | | 4.5 |
| 5.0 | 25.00 | 25.00 | 14.80 | 20.00 | 18.10 | 14.60 | 18.40 | 14.50 | 14.10 | 15.00 | 12.50 | 12.10 | 11.00 | | | 5.0 |
| 5.5 | 25.00 | 25.00 | 14.00 | 20.00 | 17.60 | 14.20 | 18.40 | 14.20 | 13.70 | 15.00 | 12.50 | 12.10 | 11.00 | 9.70 | 7.50 | 5.5 |
| 6.0 | 24.90 | 24.90 | 13.30 | 20.00 | 17.10 | 13.60 | 18.40 | 13.80 | 13.40 | 15.00 | 12.50 | 12.10 | 11.00 | 9.70 | 7.50 | 6.0 |
| 6.5 | 24.00 | 24.10 | 12.70 | 20.00 | 16.40 | 13.00 | 18.40 | 13.40 | 13.00 | 15.00 | 12.50 | 12.10 | 11.00 | 9.70 | 7.50 | 6.5 |
| 7.0 | 22.90 | 23.20 | 12.10 | 20.00 | 15.80 | 12.30 | 18.10 | 13.00 | 12.70 | 15.00 | 12.20 | 12.10 | 11.00 | 9.70 | 7.50 | 7.0 |
| 8.0 | 21.00 | 21.70 | 11.10 | 19.20 | 14.70 | 11.30 | 16.80 | 12.40 | 11.90 | 14.90 | 11.70 | 12.10 | 11.00 | 9.70 | 7.50 | 8.0 |
| 9.0 | 19.30 | 20.40 | 10.30 | 18.00 | 13.70 | 10.30 | 15.60 | 11.60 | 11.00 | 14.10 | 11.20 | 12.10 | 10.90 | 9.70 | 7.50 | 9.0 |
| 10.0 | 17.80 | 19.20 | 9.55 | 16.80 | 12.90 | 9.55 | 14.50 | 10.90 | 10.20 | 13.20 | 10.60 | 11.90 | 10.60 | 9.70 | 7.50 | 10.0 |
| 11.0 | 16.60 | 18.10 | 8.90 | 15.60 | 12.10 | 8.85 | 13.60 | 10.20 | 9.50 | 12.40 | 9.95 | 11.30 | 10.20 | 9.70 | 7.50 | 11.0 |
| 12.0 | 15.50 | 17.10 | 8.35 | 14.60 | 11.40 | 8.25 | 12.80 | 9.65 | 8.90 | 11.60 | 9.35 | 10.70 | 9.65 | 9.60 | 7.50 | 12.0 |
| 14.0 | 13.60 | 15.20 | 7.40 | 12.90 | 10.30 | 7.25 | 11.40 | 8.65 | 7.90 | 10.30 | 8.25 | 9.55 | 8.65 | 8.85 | 7.15 | 14.0 |
| 16.0 | 11.40 | 12.30 | 6.60 | 11.50 | 9.40 | 6.45 | 10.30 | 7.80 | 7.05 | 9.30 | 7.35 | 8.60 | 7.75 | 8.10 | 6.50 | 16.0 |
| 18.0 | 9.25 | 10.10 | 6.00 | 9.80 | 8.60 | 5.80 | 9.35 | 7.15 | 6.35 | 8.45 | 6.55 | 7.80 | 7.00 | 7.35 | 5.95 | 18.0 |
| 20.0 | 7.60 | 8.45 | 5.50 | 8.10 | 7.95 | 5.25 | 8.10 | 6.55 | 5.80 | 7.70 | 5.95 | 7.10 | 6.35 | 6.70 | 5.30 | 20.0 |
| 21.0 | 6.90 | 7.75 | 5.25 | 7.40 | 7.70 | 5.00 | 7.40 | 6.30 | 5.55 | 7.40 | 5.65 | 6.80 | 6.05 | 6.40 | 5.00 | 21.0 |
| 22.0 | 6.30 | 7.15 | 5.05 | 6.80 | 7.40 | 4.75 | 6.75 | 6.05 | 5.30 | 6.95 | 5.40 | 6.50 | 5.80 | 6.15 | 4.75 | 22.0 |
| 24.0 | 5.30 | 6.10 | 4.70 | 5.75 | 6.45 | 4.40 | 5.70 | 5.65 | 4.90 | 5.85 | 4.95 | 6.00 | 5.35 | 5.65 | 4.30 | 24.0 |
| 26.0 | | | | 4.85 | 5.55 | 4.05 | 4.85 | 5.30 | 4.50 | 5.00 | 4.55 | 5.20 | 4.95 | 5.25 | 3.85 | 26.0 |
| 28.0 | | | | 4.20 | 4.85 | 3.75 | 4.10 | 5.00 | 4.20 | 4.25 | 4.20 | 4.45 | 4.55 | 4.65 | 3.50 | 28.0 |
| 30.0 | | | | | | | 3.50 | 4.40 | 3.95 | 3.65 | 3.90 | 3.80 | 4.25 | 4.05 | 3.20 | 30.0 |
| 31.0 | | | | | | | 3.25 | 4.15 | 3.85 | 3.35 | 3.70 | 3.55 | 4.05 | 3.75 | 3.05 | 31.0 |
| 32.0 | | | | | | | | | | 3.10 | 3.55 | 3.25 | 3.75 | 3.50 | 2.90 | 32.0 |
| 34.0 | | | | | | | | | | 2.65 | 3.30 | 2.80 | 3.30 | 3.05 | 2.65 | 34.0 |
| 35.0 | | | | | | | | | | 2.45 | 3.20 | 2.60 | 3.10 | 2.80 | 2.55 | 35.0 |
| 36.0 | | | | | | | | | | | | 2.40 | 2.90 | 2.65 | 2.45 | 36.0 |
| 38.0 | | | | | | | | | | | | 2.05 | 2.55 | 2.25 | 2.25 | 38.0 |
| 40.0 | | | | | | | | | | | | | | 1.95 | 1.95 | 40.0 |
| 42.0 | | | | | | | | | | | | | | 1.70 | 1.65 | 42.0 |
| 44.0 | | | | | | | | | | | | | | | 1.45 | 44.0 |
| 1 | 92 | 46 | 0 | 92 | 46 | 0 | 92 | 46 | 0 | 92 | 0 | 92 | 46 | 92 | 100 | 1 |
| 2 | 46 | 46 | 0 | 46 | 46 | 0 | 92 | 46 | 46 | 92 | 92 | 92 | 92 | 92 | 100 | 2 |
| 3 | 46 | 46 | 46 | 46 | 46 | 92 | 46 | 46 | 92 | 92 | 92 | 92 | 92 | 92 | 100 | 3 |
| 4 | 46 | 46 | 92 | 46 | 46 | 92 | 46 | 92 | 92 | 46 | 92 | 92 | 92 | 92 | 100 | 4 |
| 5 | 0 | 46 | 92 | 46 | 92 | 92 | 46 | 92 | 92 | 46 | 92 | 46 | 92 | 92 | 100 | 5 |
| ID | 29 | 15 | 6 | 16 | 17 | 7 | 19 | 18 | 8 | 20 | 9 | 21 | 10 | 11 | 22 | ID |
| t | 20.1 | 22.2 | 17.0 | 20.0 | 20.0 | 16.7 | 18.4 | 15.0 | 14.7 | 15.0 | 12.5 | 12.1 | 11.0 | 9.7 | 7.5 | t |
| [DEG] | 0～84 | 0～84 | 0～84 | 0～84 | 0～84 | 0～84 | 0～84 | 0～84 | 0～84 | 0～84 | 0～84 | 0～84 | 0～84 | 0～84 | 0～84 | [DEG] |
| | 5 | 5 | 4 | 4 | 4 | 4 | 4 | 3 | 3 | 3 | 3 | 3 | 3 | 3 | 3 | |
| | 35t | 35t | 35t | 35t | 35t | 35t | 35t | 35t | 35t | 35t | 35t | 35t | 35t | 35t | 35t | |

| MB | | 4.0 t | スマートチャート2 | JPN |
|---|---|---|---|---|

| m | 10.2 | 13.7 | 13.7 | 17.2 | 17.2 | 17.2 | 17.2 | 20.7 | 20.7 | 20.7 | 20.7 | 24.2 | 24.2 | 24.2 | m |
|---|---|---|---|---|---|---|---|---|---|---|---|---|---|---|---|
| 1.6 | 75.00 | | | | | | | | | | | | | | 1.6 |
| 2.0 | 75.00 | 45.00 | 25.00 | 45.00 | 40.00 | 25.00 | 21.60 | 40.00 | 40.00 | 25.00 | 23.00 | 35.00 | 25.00 | 19.90 | 2.0 |
| 2.5 | 70.90 | 45.00 | 25.00 | 45.00 | 40.00 | 25.00 | 19.90 | 40.00 | 40.00 | 25.00 | 21.40 | 35.00 | 25.00 | 18.90 | 2.5 |
| 3.0 | 63.60 | 45.00 | 25.00 | 45.00 | 40.00 | 25.00 | 18.50 | 40.00 | 40.00 | 25.00 | 20.10 | 35.00 | 25.00 | 17.90 | 3.0 |
| 3.5 | 57.40 | 45.00 | 24.10 | 45.00 | 40.00 | 25.00 | 17.30 | 40.00 | 40.00 | 25.00 | 18.90 | 35.00 | 25.00 | 16.80 | 3.5 |
| 4.0 | 52.10 | 45.00 | 22.80 | 42.90 | 40.00 | 25.00 | 16.20 | 38.60 | 40.00 | 25.00 | 17.70 | 33.80 | 25.00 | 15.70 | 4.0 |
| 4.5 | 47.60 | 45.00 | 21.70 | 40.20 | 40.00 | 23.80 | 15.20 | 36.30 | 40.00 | 25.00 | 16.60 | 32.40 | 25.00 | 14.70 | 4.5 |
| 5.0 | 43.60 | 43.50 | 20.60 | 37.70 | 40.00 | 22.50 | 14.40 | 34.30 | 39.50 | 24.70 | 15.70 | 30.60 | 25.00 | 13.90 | 5.0 |
| 5.5 | 40.20 | 40.10 | 19.70 | 35.50 | 40.00 | 21.30 | 13.60 | 32.50 | 37.60 | 23.50 | 14.80 | 28.90 | 24.90 | 13.10 | 5.5 |
| 6.0 | 37.20 | 37.10 | 18.90 | 33.60 | 37.30 | 20.30 | 12.90 | 30.90 | 35.90 | 22.40 | 14.10 | 27.40 | 23.90 | 12.40 | 6.0 |
| 6.5 | 34.60 | 34.40 | 18.10 | 31.80 | 34.70 | 19.30 | 12.30 | 29.40 | 34.40 | 21.50 | 13.40 | 26.10 | 23.00 | 11.80 | 6.5 |
| 7.0 | 32.30 | 32.10 | 17.40 | 30.20 | 32.30 | 18.50 | 11.70 | 28.00 | 32.60 | 20.60 | 12.70 | 24.90 | 22.10 | 11.20 | 7.0 |
| 8.0 | | 27.70 | 16.20 | 27.40 | 27.90 | 16.90 | 10.70 | 25.40 | 28.30 | 19.00 | 11.60 | 22.70 | 20.50 | 10.20 | 8.0 |
| 9.0 | | 24.10 | 15.20 | 23.90 | 24.40 | 15.60 | 9.95 | 23.20 | 24.70 | 17.50 | 10.70 | 20.90 | 19.20 | 9.40 | 9.0 |
| 10.0 | | 21.30 | 14.50 | 21.10 | 21.50 | 14.60 | 9.20 | 21.30 | 21.80 | 16.30 | 9.95 | 19.30 | 18.00 | 8.65 | 10.0 |
| 11.0 | | | | 18.80 | 19.20 | 13.60 | 8.60 | 19.00 | 19.50 | 15.20 | 9.25 | 18.00 | 16.80 | 8.05 | 11.0 |
| 12.0 | | | | 16.10 | 16.80 | 12.80 | 8.10 | 16.40 | 17.30 | 14.20 | 8.65 | 16.80 | 15.80 | 7.50 | 12.0 |
| 14.0 | | | | 11.90 | 12.50 | 11.60 | 7.30 | 12.10 | 12.90 | 12.70 | 7.70 | 12.60 | 14.20 | 6.60 | 14.0 |
| 16.0 | | | | | | | | 9.30 | 9.95 | 11.30 | 6.90 | 9.65 | 11.20 | 5.90 | 16.0 |
| 18.0 | | | | | | | | | | | | 7.65 | 9.10 | 5.30 | 18.0 |
| 20.0 | | | | | | | | | | | | 6.15 | 7.55 | 4.85 | 20.0 |
| 21.0 | | | | | | | | | | | | 5.55 | 6.95 | 4.65 | 21.0 |
| 22.0 | | | | | | | | | | | | | | | 22.0 |
| 24.0 | | | | | | | | | | | | | | | 24.0 |
| 26.0 | | | | | | | | | | | | | | | 26.0 |
| 28.0 | | | | | | | | | | | | | | | 28.0 |
| 30.0 | | | | | | | | | | | | | | | 30.0 |
| 31.0 | | | | | | | | | | | | | | | 31.0 |
| 32.0 | | | | | | | | | | | | | | | 32.0 |
| 34.0 | | | | | | | | | | | | | | | 34.0 |
| 35.0 | | | | | | | | | | | | | | | 35.0 |
| 36.0 | | | | | | | | | | | | | | | 36.0 |
| 38.0 | | | | | | | | | | | | | | | 38.0 |
| 40.0 | | | | | | | | | | | | | | | 40.0 |
| 42.0 | | | | | | | | | | | | | | | 42.0 |
| 44.0 | | | | | | | | | | | | | | | 44.0 |
| 1 | 0 | 46 | 0 | 92 | 46 | 0 | 0 | 92 | 46 | 0 | 0 | 92 | 0 | 0 | 1 |
| 2 | 0 | 0 | 0 | 0 | 46 | 0 | 0 | 46 | 46 | 0 | 0 | 46 | 46 | 0 | 2 |
| 3 | 0 | 0 | 0 | 0 | 0 | 0 | 0 | 0 | 46 | 46 | 0 | 46 | 46 | 0 | 3 |
| 4 | 0 | 0 | 0 | 0 | 0 | 46 | 0 | 0 | 0 | 46 | 46 | 0 | 46 | 92 | 4 |
| 5 | 0 | 0 | 46 | 0 | 0 | 46 | 92 | 0 | 0 | 46 | 92 | 0 | 46 | 92 | 5 |
| ID | 1 | 23 | 2 | 24 | 25 | 12 | 3 | 26 | 27 | 13 | 4 | 28 | 14 | 5 | ID |
| t | 20.7 | 24.3 | 19.9 | 20.5 | 24.0 | 19.1 | 17.8 | 20.6 | 23.6 | 18.0 | 18.8 | 20.5 | 24.2 | 17.3 | t |
| [DEG] | 0～84 | 0～84 | 0～84 | 0～84 | 0～84 | 0～84 | 0～84 | 0～84 | 0～84 | 0～84 | 0～84 | 0～84 | 0～84 | 0～84 | [DEG] |
| | 20 | 9 | 5 | 9 | 8 | 5 | 5 | 8 | 8 | 5 | 5 | 7 | 5 | 4 | |
| | 重荷重装置 | 50t | 35t | 50t | 50t | 35t | 35t | 50t | 50t | 35t | 35t | 50t | 35t | 35t | |

| m | 27.7 | 27.7 | 27.7 | 31.2 | 31.2 | 31.2 | 34.7 | 34.7 | 34.7 | 38.2 | 38.2 | 41.7 | 41.7 | 45.2 | 48.0 | m |
|---|---|---|---|---|---|---|---|---|---|---|---|---|---|---|---|---|
| 1.6 | | | | | | | | | | | | | | | | 1.6 |
| 2.0 | | | | | | | | | | | | | | | | 2.0 |
| 2.5 | 25.00 | 25.00 | 18.40 | | | | | | | | | | | | | 2.5 |
| 3.0 | 25.00 | 25.00 | 17.60 | 20.00 | 20.00 | 16.70 | | | | | | | | | | 3.0 |
| 3.5 | 25.00 | 25.00 | 16.90 | 20.00 | 19.80 | 16.10 | 18.40 | 15.00 | 14.70 | | | | | | | 3.5 |
| 4.0 | 25.00 | 25.00 | 16.20 | 20.00 | 19.20 | 15.60 | 18.40 | 15.00 | 14.70 | 15.00 | 12.50 | | | | | 4.0 |
| 4.5 | 25.00 | 25.00 | 15.60 | 20.00 | 18.60 | 15.10 | 18.40 | 14.90 | 14.40 | 15.00 | 12.50 | | | | | 4.5 |
| 5.0 | 25.00 | 25.00 | 14.80 | 20.00 | 18.10 | 14.60 | 18.40 | 14.50 | 14.10 | 15.00 | 12.50 | 12.10 | 11.00 | | | 5.0 |
| 5.5 | 25.00 | 25.00 | 14.00 | 20.00 | 17.60 | 14.20 | 18.40 | 14.20 | 13.70 | 15.00 | 12.50 | 12.10 | 11.00 | 9.70 | 7.50 | 5.5 |
| 6.0 | 24.90 | 24.90 | 13.30 | 20.00 | 17.10 | 13.60 | 18.40 | 13.80 | 13.40 | 15.00 | 12.50 | 12.10 | 11.00 | 9.70 | 7.50 | 6.0 |
| 6.5 | 24.00 | 24.10 | 12.70 | 20.00 | 16.40 | 13.00 | 18.40 | 13.40 | 13.00 | 15.00 | 12.50 | 12.10 | 11.00 | 9.70 | 7.50 | 6.5 |
| 7.0 | 22.90 | 23.20 | 12.10 | 20.00 | 15.80 | 12.30 | 18.10 | 13.00 | 12.70 | 15.00 | 12.20 | 12.10 | 11.00 | 9.70 | 7.50 | 7.0 |
| 8.0 | 21.00 | 21.70 | 11.10 | 19.20 | 14.70 | 11.30 | 16.80 | 12.40 | 11.90 | 14.90 | 11.70 | 12.10 | 11.00 | 9.70 | 7.50 | 8.0 |
| 9.0 | 19.30 | 20.40 | 10.30 | 18.00 | 13.70 | 10.30 | 15.60 | 11.60 | 11.00 | 14.10 | 11.20 | 12.10 | 10.90 | 9.70 | 7.50 | 9.0 |
| 10.0 | 17.80 | 19.20 | 9.55 | 16.80 | 12.90 | 9.55 | 14.50 | 10.90 | 10.20 | 13.20 | 10.60 | 11.90 | 10.60 | 9.70 | 7.50 | 10.0 |
| 11.0 | 16.60 | 18.10 | 8.90 | 15.60 | 12.10 | 8.85 | 13.60 | 10.20 | 9.50 | 12.40 | 9.95 | 11.30 | 10.20 | 9.70 | 7.50 | 11.0 |
| 12.0 | 15.50 | 17.10 | 8.35 | 14.60 | 11.40 | 8.25 | 12.80 | 9.65 | 8.90 | 11.60 | 9.35 | 10.70 | 9.65 | 9.60 | 7.50 | 12.0 |
| 14.0 | 13.10 | 13.90 | 7.40 | 12.90 | 10.30 | 7.25 | 11.40 | 8.65 | 7.90 | 10.30 | 8.25 | 9.55 | 8.65 | 8.85 | 7.15 | 14.0 |
| 16.0 | 10.10 | 10.90 | 6.60 | 10.60 | 9.40 | 6.45 | 10.30 | 7.80 | 7.05 | 9.30 | 7.35 | 8.60 | 7.75 | 8.10 | 6.50 | 16.0 |
| 18.0 | 8.10 | 8.85 | 6.00 | 8.55 | 8.60 | 5.80 | 8.55 | 7.15 | 6.35 | 8.45 | 6.55 | 7.80 | 7.00 | 7.35 | 5.95 | 18.0 |
| 20.0 | 6.55 | 7.25 | 5.50 | 7.00 | 7.60 | 5.25 | 6.95 | 6.55 | 5.80 | 7.10 | 5.95 | 7.10 | 6.35 | 6.70 | 5.30 | 20.0 |
| 21.0 | 5.95 | 6.65 | 5.25 | 6.35 | 6.95 | 5.00 | 6.35 | 6.30 | 5.55 | 6.50 | 5.65 | 6.65 | 6.05 | 6.40 | 5.00 | 21.0 |
| 22.0 | 5.40 | 6.10 | 5.05 | 5.80 | 6.40 | 4.75 | 5.80 | 6.05 | 5.30 | 5.90 | 5.40 | 6.10 | 5.80 | 6.15 | 4.75 | 22.0 |
| 24.0 | 4.50 | 5.15 | 4.70 | 4.85 | 5.45 | 4.40 | 4.85 | 5.60 | 4.90 | 4.95 | 4.95 | 5.15 | 5.35 | 5.35 | 4.30 | 24.0 |
| 26.0 | | | | 4.10 | 4.70 | 4.05 | 4.05 | 4.85 | 4.50 | 4.20 | 4.55 | 4.35 | 4.80 | 4.55 | 3.85 | 26.0 |
| 28.0 | | | | 3.50 | 4.05 | 3.75 | 3.45 | 4.20 | 4.20 | 3.55 | 4.20 | 3.70 | 4.15 | 3.90 | 3.50 | 28.0 |
| 30.0 | | | | | | | 2.95 | 3.65 | 3.90 | 3.00 | 3.70 | 3.15 | 3.60 | 3.35 | 3.20 | 30.0 |
| 31.0 | | | | | | | 2.70 | 3.45 | 3.65 | 2.80 | 3.50 | 2.95 | 3.35 | 3.15 | 3.05 | 31.0 |
| 32.0 | | | | | | | | | | 2.55 | 3.25 | 2.70 | 3.15 | 2.90 | 2.90 | 32.0 |
| 34.0 | | | | | | | | | | 2.15 | 2.85 | 2.30 | 2.75 | 2.50 | 2.50 | 34.0 |
| 35.0 | | | | | | | | | | 2.00 | 2.70 | 2.10 | 2.55 | 2.30 | 2.30 | 35.0 |
| 36.0 | | | | | | | | | | | | 1.95 | 2.40 | 2.15 | 2.15 | 36.0 |
| 38.0 | | | | | | | | | | | | 1.65 | 2.10 | 1.85 | 1.80 | 38.0 |
| 40.0 | | | | | | | | | | | | | | 1.55 | 1.55 | 40.0 |
| 42.0 | | | | | | | | | | | | | | 1.35 | 1.30 | 42.0 |
| 44.0 | | | | | | | | | | | | | | | 1.10 | 44.0 |
| 1 | 92 | 46 | 0 | 92 | 46 | 0 | 92 | 46 | 0 | 92 | 0 | 92 | 46 | 92 | 100 | 1 |
| 2 | 46 | 46 | 0 | 46 | 46 | 0 | 92 | 46 | 46 | 92 | 92 | 92 | 92 | 92 | 100 | 2 |
| 3 | 46 | 46 | 46 | 46 | 46 | 92 | 46 | 46 | 92 | 92 | 92 | 92 | 92 | 92 | 100 | 3 |
| 4 | 46 | 46 | 92 | 46 | 46 | 92 | 46 | 92 | 92 | 46 | 92 | 92 | 92 | 92 | 100 | 4 |
| 5 | 0 | 46 | 92 | 46 | 92 | 92 | 46 | 92 | 92 | 46 | 92 | 46 | 92 | 92 | 100 | 5 |
| ID | 29 | 15 | 6 | 16 | 17 | 7 | 19 | 18 | 8 | 20 | 9 | 21 | 10 | 11 | 22 | ID |
| t | 20.1 | 22.2 | 17.0 | 20.0 | 20.0 | 16.7 | 18.4 | 15.0 | 14.7 | 15.0 | 12.5 | 12.1 | 11.0 | 9.7 | 7.5 | t |
| [DEG] | 0～84 | 0～84 | 0～84 | 0～84 | 0～84 | 0～84 | 0～84 | 0～84 | 0～84 | 0～84 | 0～84 | 0～84 | 0～84 | 0～84 | 0～84 | [DEG] |
| | 5 | 5 | 4 | 4 | 4 | 4 | 4 | 3 | 3 | 3 | 3 | 3 | 3 | 3 | 3 | |
| | 35t | 35t | 35t | 35t | 35t | 35t | 35t | 35t | 35t | 35t | 35t | 35t | 35t | 35t | 35t | |

# ブーム

| MB | | 4.0 t | 7.8m | 360 ° | JPN |
|---|---|---|---|---|---|

| m | 10.2 | 13.7 | 13.7 | 17.2 | 17.2 | 17.2 | 17.2 | 20.7 | 20.7 | 20.7 | 20.7 | 24.2 | 24.2 | 24.2 | m |
|---|---|---|---|---|---|---|---|---|---|---|---|---|---|---|---|
| 1.6 | 75.00 | | | | | | | | | | | | | | 1.6 |
| 2.0 | 75.00 | 45.00 | 25.00 | 45.00 | 40.00 | 25.00 | 21.60 | 40.00 | 40.00 | 25.00 | 23.00 | 35.00 | 25.00 | 19.90 | 2.0 |
| 2.5 | 70.90 | 45.00 | 25.00 | 45.00 | 40.00 | 25.00 | 19.90 | 40.00 | 40.00 | 25.00 | 21.40 | 35.00 | 25.00 | 18.90 | 2.5 |
| 3.0 | 63.60 | 45.00 | 25.00 | 45.00 | 40.00 | 25.00 | 18.50 | 40.00 | 40.00 | 25.00 | 20.10 | 35.00 | 25.00 | 17.90 | 3.0 |
| 3.5 | 57.40 | 45.00 | 24.10 | 45.00 | 40.00 | 25.00 | 17.30 | 40.00 | 40.00 | 25.00 | 18.90 | 35.00 | 25.00 | 16.80 | 3.5 |
| 4.0 | 52.10 | 45.00 | 22.80 | 42.90 | 40.00 | 25.00 | 16.20 | 38.60 | 40.00 | 25.00 | 17.70 | 33.80 | 25.00 | 15.70 | 4.0 |
| 4.5 | 47.60 | 45.00 | 21.70 | 40.20 | 40.00 | 23.80 | 15.20 | 36.30 | 40.00 | 25.00 | 16.60 | 32.40 | 25.00 | 14.70 | 4.5 |
| 5.0 | 43.60 | 43.50 | 20.60 | 37.70 | 40.00 | 22.50 | 14.40 | 34.30 | 39.50 | 24.70 | 15.70 | 30.60 | 25.00 | 13.90 | 5.0 |
| 5.5 | 40.20 | 40.10 | 19.70 | 35.50 | 40.00 | 21.30 | 13.60 | 32.50 | 37.60 | 23.50 | 14.80 | 28.90 | 24.90 | 13.10 | 5.5 |
| 6.0 | 37.20 | 37.10 | 18.90 | 33.60 | 37.30 | 20.30 | 12.90 | 30.90 | 35.90 | 22.40 | 14.10 | 27.40 | 23.90 | 12.40 | 6.0 |
| 6.5 | 34.60 | 34.40 | 18.10 | 31.80 | 34.70 | 19.30 | 12.30 | 29.40 | 34.40 | 21.50 | 13.40 | 26.10 | 23.00 | 11.80 | 6.5 |
| 7.0 | 32.30 | 32.10 | 17.40 | 30.20 | 32.30 | 18.50 | 11.70 | 28.00 | 32.60 | 20.60 | 12.70 | 24.90 | 22.10 | 11.20 | 7.0 |
| 8.0 | | 27.70 | 16.20 | 27.40 | 27.90 | 16.90 | 10.70 | 25.40 | 28.30 | 19.00 | 11.60 | 22.70 | 20.50 | 10.20 | 8.0 |
| 9.0 | | 23.40 | 15.20 | 23.10 | 23.70 | 15.60 | 9.95 | 23.20 | 24.20 | 17.50 | 10.70 | 20.90 | 19.20 | 9.40 | 9.0 |
| 10.0 | | 19.00 | 14.50 | 18.70 | 19.40 | 14.60 | 9.20 | 19.10 | 19.90 | 16.30 | 9.95 | 19.30 | 18.00 | 8.65 | 10.0 |
| 11.0 | | | | 15.40 | 16.10 | 13.60 | 8.60 | 15.80 | 16.50 | 15.20 | 9.25 | 16.20 | 16.80 | 8.05 | 11.0 |
| 12.0 | | | | 13.00 | 13.60 | 12.80 | 8.10 | 13.30 | 14.00 | 14.20 | 8.65 | 13.70 | 15.40 | 7.50 | 12.0 |
| 14.0 | | | | 9.60 | 10.10 | 11.60 | 7.30 | 9.85 | 10.50 | 11.90 | 7.70 | 10.20 | 11.80 | 6.60 | 14.0 |
| 16.0 | | | | | | | | 7.50 | 8.15 | 9.45 | 6.90 | 7.90 | 9.35 | 5.90 | 16.0 |
| 18.0 | | | | | | | | | | | | 6.20 | 7.60 | 5.30 | 18.0 |
| 20.0 | | | | | | | | | | | | 4.95 | 6.30 | 4.85 | 20.0 |
| 21.0 | | | | | | | | | | | | 4.50 | 5.80 | 4.65 | 21.0 |
| 22.0 | | | | | | | | | | | | | | | 22.0 |
| 24.0 | | | | | | | | | | | | | | | 24.0 |
| 26.0 | | | | | | | | | | | | | | | 26.0 |
| 28.0 | | | | | | | | | | | | | | | 28.0 |
| 30.0 | | | | | | | | | | | | | | | 30.0 |
| 31.0 | | | | | | | | | | | | | | | 31.0 |
| 32.0 | | | | | | | | | | | | | | | 32.0 |
| 34.0 | | | | | | | | | | | | | | | 34.0 |
| 35.0 | | | | | | | | | | | | | | | 35.0 |
| 36.0 | | | | | | | | | | | | | | | 36.0 |
| 38.0 | | | | | | | | | | | | | | | 38.0 |
| 40.0 | | | | | | | | | | | | | | | 40.0 |
| 42.0 | | | | | | | | | | | | | | | 42.0 |
| 44.0 | | | | | | | | | | | | | | | 44.0 |
| 1 | 0 | 46 | 0 | 92 | 46 | 0 | 0 | 92 | 46 | 0 | 0 | 92 | 0 | 0 | 1 |
| 2 | 0 | 0 | 0 | 0 | 46 | 0 | 0 | 46 | 46 | 0 | 0 | 46 | 46 | 0 | 2 |
| 3 | 0 | 0 | 0 | 0 | 0 | 0 | 0 | 0 | 46 | 46 | 0 | 46 | 46 | 0 | 3 |
| 4 | 0 | 0 | 0 | 0 | 0 | 46 | 0 | 0 | 0 | 46 | 46 | 0 | 46 | 92 | 4 |
| 5 | 0 | 0 | 46 | 0 | 0 | 46 | 92 | 0 | 0 | 46 | 92 | 0 | 46 | 92 | 5 |
| ID | 1 | 23 | 2 | 24 | 25 | 12 | 3 | 26 | 27 | 13 | 4 | 28 | 14 | 5 | ID |
| t | 20.7 | 24.3 | 19.9 | 20.5 | 24.0 | 19.1 | 17.8 | 20.6 | 23.6 | 18.0 | 18.8 | 20.5 | 24.2 | 17.3 | t |
| [DEG] | 0～84 | 0～84 | 0～84 | 0～84 | 0～84 | 0～84 | 0～84 | 0～84 | 0～84 | 0～84 | 0～84 | 0～84 | 0～84 | 0～84 | [DEG] |
| | 20 | 9 | 5 | 9 | 8 | 5 | 5 | 8 | 8 | 5 | 5 | 7 | 5 | 4 | |
| | 重荷重装置 | 50t | 35t | 50t | 50t | 35t | 35t | 50t | 50t | 35t | 35t | 50t | 35t | 35t | |

| m | 27.7 | 27.7 | 27.7 | 31.2 | 31.2 | 31.2 | 34.7 | 34.7 | 34.7 | 38.2 | 38.2 | 41.7 | 41.7 | 45.2 | 48.0 | m |
|---|---|---|---|---|---|---|---|---|---|---|---|---|---|---|---|---|
| 1.6 | | | | | | | | | | | | | | | | 1.6 |
| 2.0 | | | | | | | | | | | | | | | | 2.0 |
| 2.5 | 25.00 | 25.00 | 18.40 | | | | | | | | | | | | | 2.5 |
| 3.0 | 25.00 | 25.00 | 17.60 | 20.00 | 20.00 | 16.70 | | | | | | | | | | 3.0 |
| 3.5 | 25.00 | 25.00 | 16.90 | 20.00 | 19.80 | 16.10 | 18.40 | 15.00 | 14.70 | | | | | | | 3.5 |
| 4.0 | 25.00 | 25.00 | 16.20 | 20.00 | 19.20 | 15.60 | 18.40 | 15.00 | 14.70 | 15.00 | 12.50 | | | | | 4.0 |
| 4.5 | 25.00 | 25.00 | 15.60 | 20.00 | 18.60 | 15.10 | 18.40 | 14.90 | 14.40 | 15.00 | 12.50 | | | | | 4.5 |
| 5.0 | 25.00 | 25.00 | 14.80 | 20.00 | 18.10 | 14.60 | 18.40 | 14.50 | 14.10 | 15.00 | 12.50 | 12.10 | 11.00 | | | 5.0 |
| 5.5 | 25.00 | 25.00 | 14.00 | 20.00 | 17.60 | 14.20 | 18.40 | 14.20 | 13.70 | 15.00 | 12.50 | 12.10 | 11.00 | 9.70 | 7.50 | 5.5 |
| 6.0 | 24.90 | 24.90 | 13.30 | 20.00 | 17.10 | 13.60 | 18.40 | 13.80 | 13.40 | 15.00 | 12.50 | 12.10 | 11.00 | 9.70 | 7.50 | 6.0 |
| 6.5 | 24.00 | 24.10 | 12.70 | 20.00 | 16.40 | 13.00 | 18.40 | 13.40 | 13.00 | 15.00 | 12.50 | 12.10 | 11.00 | 9.70 | 7.50 | 6.5 |
| 7.0 | 22.90 | 23.20 | 12.10 | 20.00 | 15.80 | 12.30 | 18.10 | 13.00 | 12.70 | 15.00 | 12.20 | 12.10 | 11.00 | 9.70 | 7.50 | 7.0 |
| 8.0 | 21.00 | 21.70 | 11.10 | 19.20 | 14.70 | 11.30 | 16.80 | 12.40 | 11.90 | 14.90 | 11.70 | 12.10 | 11.00 | 9.70 | 7.50 | 8.0 |
| 9.0 | 19.30 | 20.40 | 10.30 | 18.00 | 13.70 | 10.30 | 15.60 | 11.60 | 11.00 | 14.10 | 11.20 | 12.10 | 10.90 | 9.70 | 7.50 | 9.0 |
| 10.0 | 17.80 | 19.20 | 9.55 | 16.80 | 12.90 | 9.55 | 14.50 | 10.90 | 10.20 | 13.20 | 10.60 | 11.90 | 10.60 | 9.70 | 7.50 | 10.0 |
| 11.0 | 16.60 | 17.70 | 8.90 | 15.60 | 12.10 | 8.85 | 13.60 | 10.20 | 9.50 | 12.40 | 9.95 | 11.30 | 10.20 | 9.70 | 7.50 | 11.0 |
| 12.0 | 14.30 | 15.10 | 8.35 | 14.60 | 11.40 | 8.25 | 12.80 | 9.65 | 8.90 | 11.60 | 9.35 | 10.70 | 9.65 | 9.60 | 7.50 | 12.0 |
| 14.0 | 10.70 | 11.50 | 7.40 | 11.20 | 10.30 | 7.25 | 11.20 | 8.65 | 7.90 | 10.30 | 8.25 | 9.55 | 8.65 | 8.85 | 7.15 | 14.0 |
| 16.0 | 8.35 | 9.05 | 6.60 | 8.80 | 9.40 | 6.45 | 8.80 | 7.80 | 7.05 | 8.95 | 7.35 | 8.60 | 7.75 | 8.10 | 6.50 | 16.0 |
| 18.0 | 6.65 | 7.35 | 6.00 | 7.05 | 7.70 | 5.80 | 7.05 | 7.15 | 6.35 | 7.20 | 6.55 | 7.40 | 7.00 | 7.35 | 5.95 | 18.0 |
| 20.0 | 5.35 | 6.05 | 5.50 | 5.75 | 6.35 | 5.25 | 5.75 | 6.55 | 5.80 | 5.90 | 5.95 | 6.05 | 6.35 | 6.30 | 5.30 | 20.0 |
| 21.0 | 4.85 | 5.50 | 5.25 | 5.25 | 5.85 | 5.00 | 5.20 | 6.00 | 5.55 | 5.35 | 5.65 | 5.50 | 5.95 | 5.75 | 5.00 | 21.0 |
| 22.0 | 4.35 | 5.05 | 5.05 | 4.75 | 5.35 | 4.75 | 4.75 | 5.50 | 5.30 | 4.85 | 5.40 | 5.05 | 5.45 | 5.25 | 4.75 | 22.0 |
| 24.0 | 3.60 | 4.25 | 4.70 | 3.95 | 4.55 | 4.40 | 3.95 | 4.70 | 4.90 | 4.05 | 4.75 | 4.20 | 4.65 | 4.40 | 4.30 | 24.0 |
| 26.0 | | | | 3.30 | 3.85 | 4.05 | 3.30 | 4.00 | 4.25 | 3.40 | 4.10 | 3.55 | 3.95 | 3.75 | 3.75 | 26.0 |
| 28.0 | | | | 2.80 | 3.35 | 3.75 | 2.75 | 3.45 | 3.70 | 2.85 | 3.55 | 3.00 | 3.40 | 3.20 | 3.20 | 28.0 |
| 30.0 | | | | | | | 2.25 | 3.00 | 3.25 | 2.35 | 3.05 | 2.55 | 2.95 | 2.70 | 2.70 | 30.0 |
| 31.0 | | | | | | | 2.05 | 2.80 | 3.05 | 2.15 | 2.85 | 2.30 | 2.75 | 2.50 | 2.50 | 31.0 |
| 32.0 | | | | | | | | | | 1.95 | 2.65 | 2.10 | 2.55 | 2.30 | 2.30 | 32.0 |
| 34.0 | | | | | | | | | | 1.60 | 2.30 | 1.75 | 2.20 | 1.95 | 1.95 | 34.0 |
| 35.0 | | | | | | | | | | 1.45 | 2.20 | 1.60 | 2.05 | 1.80 | 1.80 | 35.0 |
| 36.0 | | | | | | | | | | | | 1.45 | 1.85 | 1.60 | 1.60 | 36.0 |
| 38.0 | | | | | | | | | | | | 1.15 | 1.60 | 1.35 | 1.35 | 38.0 |
| 40.0 | | | | | | | | | | | | | | 1.10 | 1.10 | 40.0 |
| 42.0 | | | | | | | | | | | | | | 0.90 | 0.85 | 42.0 |
| 44.0 | | | | | | | | | | | | | | | 0.70 | 44.0 |
| 1 | 92 | 46 | 0 | 92 | 46 | 0 | 92 | 46 | 0 | 92 | 0 | 92 | 46 | 92 | 100 | 1 |
| 2 | 46 | 46 | 0 | 46 | 46 | 0 | 92 | 46 | 46 | 92 | 92 | 92 | 92 | 92 | 100 | 2 |
| 3 | 46 | 46 | 46 | 46 | 46 | 92 | 46 | 46 | 92 | 92 | 92 | 92 | 92 | 92 | 100 | 3 |
| 4 | 46 | 46 | 92 | 46 | 46 | 92 | 46 | 92 | 92 | 46 | 92 | 92 | 92 | 92 | 100 | 4 |
| 5 | 0 | 46 | 92 | 46 | 92 | 92 | 46 | 92 | 92 | 46 | 92 | 46 | 92 | 92 | 100 | 5 |
| ID | 29 | 15 | 6 | 16 | 17 | 7 | 19 | 18 | 8 | 20 | 9 | 21 | 10 | 11 | 22 | ID |
| t | 20.1 | 22.2 | 17.0 | 20.0 | 20.0 | 16.7 | 18.4 | 15.0 | 14.7 | 15.0 | 12.5 | 12.1 | 11.0 | 9.7 | 7.5 | t |
| [DEG] | 0～84 | 0～84 | 0～84 | 0～84 | 0～84 | 0～84 | 0～84 | 0～84 | 0～84 | 0～84 | 0～84 | 0～84 | 0～84 | 0～84 | 0～84 | [DEG] |
| | 5 | 5 | 4 | 4 | 4 | 4 | 4 | 3 | 3 | 3 | 3 | 3 | 3 | 3 | 3 | |
| | 35t | 35t | 35t | 35t | 35t | 35t | 35t | 35t | 35t | 35t | 35t | 35t | 35t | 35t | 35t | |

| MB | | 4.0 t | 7.6m | 360 ° | JPN |
|---|---|---|---|---|---|

| m | 10.2 | 13.7 | 13.7 | 17.2 | 17.2 | 17.2 | 17.2 | 20.7 | 20.7 | 20.7 | 20.7 | 24.2 | 24.2 | 24.2 | m |
|---|---|---|---|---|---|---|---|---|---|---|---|---|---|---|---|
| | | | | | | | | | | | | | | | |
| 1.6 | 75.00 | | | | | | | | | | | | | | 1.6 |
| 2.0 | 75.00 | 45.00 | 25.00 | 45.00 | 40.00 | 25.00 | 21.60 | 40.00 | 40.00 | 25.00 | 23.00 | 35.00 | 25.00 | 19.90 | 2.0 |
| 2.5 | 70.40 | 45.00 | 25.00 | 45.00 | 40.00 | 25.00 | 19.90 | 40.00 | 40.00 | 25.00 | 21.40 | 35.00 | 25.00 | 18.90 | 2.5 |
| 3.0 | 63.00 | 45.00 | 25.00 | 45.00 | 40.00 | 25.00 | 18.50 | 40.00 | 40.00 | 25.00 | 20.10 | 35.00 | 25.00 | 17.90 | 3.0 |
| 3.5 | 56.80 | 45.00 | 24.10 | 45.00 | 40.00 | 25.00 | 17.30 | 40.00 | 40.00 | 25.00 | 18.90 | 35.00 | 25.00 | 16.80 | 3.5 |
| 4.0 | 51.60 | 45.00 | 22.80 | 42.90 | 40.00 | 25.00 | 16.20 | 38.60 | 40.00 | 25.00 | 17.70 | 33.80 | 25.00 | 15.70 | 4.0 |
| 4.5 | 47.10 | 45.00 | 21.70 | 40.20 | 40.00 | 23.80 | 15.20 | 36.30 | 40.00 | 25.00 | 16.60 | 32.40 | 25.00 | 14.70 | 4.5 |
| 5.0 | 43.20 | 43.00 | 20.60 | 37.70 | 40.00 | 22.50 | 14.40 | 34.30 | 39.50 | 24.70 | 15.70 | 30.60 | 25.00 | 13.90 | 5.0 |
| 5.5 | 39.80 | 39.60 | 19.70 | 35.50 | 39.90 | 21.30 | 13.60 | 32.50 | 37.60 | 23.50 | 14.80 | 28.90 | 24.90 | 13.10 | 5.5 |
| 6.0 | 36.80 | 36.70 | 18.90 | 33.60 | 36.90 | 20.30 | 12.90 | 30.90 | 35.90 | 22.40 | 14.10 | 27.40 | 23.90 | 12.40 | 6.0 |
| 6.5 | 34.20 | 34.00 | 18.10 | 31.80 | 34.20 | 19.30 | 12.30 | 29.40 | 34.40 | 21.50 | 13.40 | 26.10 | 23.00 | 11.80 | 6.5 |
| 7.0 | 31.90 | 31.70 | 17.40 | 30.20 | 31.90 | 18.50 | 11.70 | 28.00 | 32.20 | 20.60 | 12.70 | 24.90 | 22.10 | 11.20 | 7.0 |
| 8.0 | | 27.70 | 16.20 | 27.40 | 27.90 | 16.90 | 10.70 | 25.40 | 28.20 | 19.00 | 11.60 | 22.70 | 20.50 | 10.20 | 8.0 |
| 9.0 | | 22.50 | 15.20 | 22.20 | 22.90 | 15.60 | 9.95 | 22.50 | 23.40 | 17.50 | 10.70 | 20.90 | 19.20 | 9.40 | 9.0 |
| 10.0 | | 18.20 | 14.50 | 17.80 | 18.50 | 14.60 | 9.20 | 18.20 | 19.00 | 16.30 | 9.95 | 18.70 | 18.00 | 8.65 | 10.0 |
| 11.0 | | | | 14.70 | 15.40 | 13.60 | 8.60 | 15.10 | 15.80 | 15.20 | 9.25 | 15.50 | 16.80 | 8.05 | 11.0 |
| 12.0 | | | | 12.40 | 13.00 | 12.80 | 8.10 | 12.70 | 13.40 | 14.20 | 8.65 | 13.10 | 14.80 | 7.50 | 12.0 |
| 14.0 | | | | 9.15 | 9.70 | 11.30 | 7.30 | 9.40 | 10.00 | 11.40 | 7.70 | 9.80 | 11.30 | 6.60 | 14.0 |
| 16.0 | | | | | | | | 7.20 | 7.80 | 9.10 | 6.90 | 7.55 | 9.00 | 5.90 | 16.0 |
| 18.0 | | | | | | | | | | | | 5.90 | 7.30 | 5.30 | 18.0 |
| 20.0 | | | | | | | | | | | | 4.70 | 6.05 | 4.85 | 20.0 |
| 21.0 | | | | | | | | | | | | 4.25 | 5.55 | 4.65 | 21.0 |
| 22.0 | | | | | | | | | | | | | | | 22.0 |
| 24.0 | | | | | | | | | | | | | | | 24.0 |
| 26.0 | | | | | | | | | | | | | | | 26.0 |
| 28.0 | | | | | | | | | | | | | | | 28.0 |
| 30.0 | | | | | | | | | | | | | | | 30.0 |
| 31.0 | | | | | | | | | | | | | | | 31.0 |
| 32.0 | | | | | | | | | | | | | | | 32.0 |
| 34.0 | | | | | | | | | | | | | | | 34.0 |
| 35.0 | | | | | | | | | | | | | | | 35.0 |
| 36.0 | | | | | | | | | | | | | | | 36.0 |
| 38.0 | | | | | | | | | | | | | | | 38.0 |
| 40.0 | | | | | | | | | | | | | | | 40.0 |
| 42.0 | | | | | | | | | | | | | | | 42.0 |
| 44.0 | | | | | | | | | | | | | | | 44.0 |
| 1 | 0 | 46 | 0 | 92 | 46 | 0 | 0 | 92 | 46 | 0 | 0 | 92 | 0 | 0 | 1 |
| 2 | 0 | 0 | 0 | 0 | 46 | 0 | 0 | 46 | 46 | 0 | 0 | 46 | 46 | 0 | 2 |
| 3 | 0 | 0 | 0 | 0 | 0 | 0 | 0 | 0 | 46 | 46 | 0 | 46 | 46 | 0 | 3 |
| 4 | 0 | 0 | 0 | 0 | 0 | 46 | 0 | 0 | 0 | 46 | 46 | 0 | 46 | 92 | 4 |
| 5 | 0 | 0 | 46 | 0 | 0 | 46 | 92 | 0 | 0 | 46 | 92 | 0 | 46 | 92 | 5 |
| ID | 1 | 23 | 2 | 24 | 25 | 12 | 3 | 26 | 27 | 13 | 4 | 28 | 14 | 5 | ID |
| t | 20.7 | 24.3 | 19.9 | 20.5 | 24.0 | 19.1 | 17.8 | 20.6 | 23.6 | 18.0 | 18.8 | 20.5 | 24.2 | 17.3 | t |
| [DEG] | 0～84 | 0～84 | 0～84 | 0～84 | 0～84 | 0～84 | 0～84 | 0～84 | 0～84 | 0～84 | 0～84 | 0～84 | 0～84 | 0～84 | [DEG] |
| | 20 | 9 | 5 | 9 | 8 | 5 | 5 | 8 | 8 | 5 | 5 | 7 | 5 | 4 | |
| | 重荷重装置 | 50t | 35t | 50t | 50t | 35t | 35t | 50t | 50t | 35t | 35t | 50t | 35t | 35t | |

| m | 27.7 | 27.7 | 27.7 | 31.2 | 31.2 | 31.2 | 34.7 | 34.7 | 34.7 | 38.2 | 38.2 | 41.7 | 41.7 | 45.2 | 48.0 | m |
|---|---|---|---|---|---|---|---|---|---|---|---|---|---|---|---|---|
| | | | | | | | | | | | | | | | | |
| 1.6 | | | | | | | | | | | | | | | | 1.6 |
| 2.0 | | | | | | | | | | | | | | | | 2.0 |
| 2.5 | 25.00 | 25.00 | 18.40 | | | | | | | | | | | | | 2.5 |
| 3.0 | 25.00 | 25.00 | 17.60 | 20.00 | 20.00 | 16.70 | | | | | | | | | | 3.0 |
| 3.5 | 25.00 | 25.00 | 16.90 | 20.00 | 19.80 | 16.10 | 18.40 | 15.00 | 14.70 | | | | | | | 3.5 |
| 4.0 | 25.00 | 25.00 | 16.20 | 20.00 | 19.20 | 15.60 | 18.40 | 15.00 | 14.70 | 15.00 | 12.50 | | | | | 4.0 |
| 4.5 | 25.00 | 25.00 | 15.60 | 20.00 | 18.60 | 15.10 | 18.40 | 14.90 | 14.40 | 15.00 | 12.50 | | | | | 4.5 |
| 5.0 | 25.00 | 25.00 | 14.80 | 20.00 | 18.10 | 14.60 | 18.40 | 14.50 | 14.10 | 15.00 | 12.50 | 12.10 | 11.00 | | | 5.0 |
| 5.5 | 25.00 | 25.00 | 14.00 | 20.00 | 17.60 | 14.20 | 18.40 | 14.20 | 13.70 | 15.00 | 12.50 | 12.10 | 11.00 | 9.70 | 7.50 | 5.5 |
| 6.0 | 24.90 | 24.90 | 13.30 | 20.00 | 17.10 | 13.60 | 18.40 | 13.80 | 13.40 | 15.00 | 12.50 | 12.10 | 11.00 | 9.70 | 7.50 | 6.0 |
| 6.5 | 24.00 | 24.10 | 12.70 | 20.00 | 16.40 | 13.00 | 18.40 | 13.40 | 13.00 | 15.00 | 12.50 | 12.10 | 11.00 | 9.70 | 7.50 | 6.5 |
| 7.0 | 22.90 | 23.20 | 12.10 | 20.00 | 15.80 | 12.30 | 18.10 | 13.00 | 12.70 | 15.00 | 12.20 | 12.10 | 11.00 | 9.70 | 7.50 | 7.0 |
| 8.0 | 21.00 | 21.70 | 11.10 | 19.20 | 14.70 | 11.30 | 16.80 | 12.40 | 11.90 | 14.90 | 11.70 | 12.10 | 11.00 | 9.70 | 7.50 | 8.0 |
| 9.0 | 19.30 | 20.40 | 10.30 | 18.00 | 13.70 | 10.30 | 15.60 | 11.60 | 11.00 | 14.10 | 11.20 | 12.10 | 10.90 | 9.70 | 7.50 | 9.0 |
| 10.0 | 17.80 | 19.20 | 9.55 | 16.80 | 12.90 | 9.55 | 14.50 | 10.90 | 10.20 | 13.20 | 10.60 | 11.90 | 10.60 | 9.70 | 7.50 | 10.0 |
| 11.0 | 16.10 | 17.00 | 8.90 | 15.60 | 12.10 | 8.85 | 13.60 | 10.20 | 9.50 | 12.40 | 9.95 | 11.30 | 10.20 | 9.70 | 7.50 | 11.0 |
| 12.0 | 13.70 | 14.50 | 8.35 | 14.20 | 11.40 | 8.25 | 12.80 | 9.65 | 8.90 | 11.60 | 9.35 | 10.70 | 9.65 | 9.60 | 7.50 | 12.0 |
| 14.0 | 10.30 | 11.00 | 7.40 | 10.70 | 10.30 | 7.25 | 10.70 | 8.65 | 7.90 | 10.30 | 8.25 | 9.55 | 8.65 | 8.85 | 7.15 | 14.0 |
| 16.0 | 8.00 | 8.70 | 6.60 | 8.45 | 9.10 | 6.45 | 8.45 | 7.80 | 7.05 | 8.60 | 7.35 | 8.60 | 7.75 | 8.10 | 6.50 | 16.0 |
| 18.0 | 6.35 | 7.05 | 6.00 | 6.75 | 7.40 | 5.80 | 6.75 | 7.15 | 6.35 | 6.90 | 6.55 | 7.10 | 7.00 | 7.30 | 5.95 | 18.0 |
| 20.0 | 5.10 | 5.80 | 5.50 | 5.50 | 6.10 | 5.25 | 5.50 | 6.30 | 5.80 | 5.65 | 5.95 | 5.80 | 6.25 | 6.00 | 5.30 | 20.0 |
| 21.0 | 4.60 | 5.25 | 5.25 | 5.00 | 5.60 | 5.00 | 5.00 | 5.75 | 5.55 | 5.10 | 5.65 | 5.30 | 5.75 | 5.50 | 5.00 | 21.0 |
| 22.0 | 4.15 | 4.80 | 5.05 | 4.55 | 5.15 | 4.75 | 4.55 | 5.30 | 5.30 | 4.65 | 5.40 | 4.80 | 5.25 | 5.05 | 4.75 | 22.0 |
| 24.0 | 3.40 | 4.05 | 4.70 | 3.75 | 4.35 | 4.40 | 3.75 | 4.50 | 4.75 | 3.85 | 4.55 | 4.05 | 4.45 | 4.25 | 4.25 | 24.0 |
| 26.0 | | | | 3.15 | 3.70 | 4.05 | 3.10 | 3.85 | 4.10 | 3.25 | 3.90 | 3.40 | 3.80 | 3.60 | 3.60 | 26.0 |
| 28.0 | | | | 2.65 | 3.20 | 3.60 | 2.60 | 3.30 | 3.55 | 2.70 | 3.35 | 2.85 | 3.25 | 3.05 | 3.05 | 28.0 |
| 30.0 | | | | | | | 2.10 | 2.85 | 3.10 | 2.25 | 2.90 | 2.40 | 2.80 | 2.55 | 2.55 | 30.0 |
| 31.0 | | | | | | | 1.95 | 2.65 | 2.90 | 2.00 | 2.70 | 2.20 | 2.60 | 2.35 | 2.35 | 31.0 |
| 32.0 | | | | | | | | | | 1.80 | 2.55 | 2.00 | 2.40 | 2.20 | 2.20 | 32.0 |
| 34.0 | | | | | | | | | | 1.45 | 2.20 | 1.60 | 2.05 | 1.80 | 1.80 | 34.0 |
| 35.0 | | | | | | | | | | 1.35 | 2.05 | 1.45 | 1.90 | 1.65 | 1.65 | 35.0 |
| 36.0 | | | | | | | | | | | | 1.30 | 1.75 | 1.50 | 1.50 | 36.0 |
| 38.0 | | | | | | | | | | | | 1.05 | 1.50 | 1.25 | 1.25 | 38.0 |
| 40.0 | | | | | | | | | | | | | | 1.00 | 1.00 | 40.0 |
| 42.0 | | | | | | | | | | | | | | 0.80 | 0.80 | 42.0 |
| 44.0 | | | | | | | | | | | | | | | 0.60 | 44.0 |
| 1 | 92 | 46 | 0 | 92 | 46 | 0 | 92 | 46 | 0 | 92 | 0 | 92 | 46 | 92 | 100 | 1 |
| 2 | 46 | 46 | 0 | 46 | 46 | 0 | 92 | 46 | 46 | 92 | 92 | 92 | 92 | 92 | 100 | 2 |
| 3 | 46 | 46 | 46 | 46 | 46 | 92 | 46 | 46 | 92 | 92 | 92 | 92 | 92 | 92 | 100 | 3 |
| 4 | 46 | 46 | 92 | 46 | 46 | 92 | 46 | 92 | 92 | 46 | 92 | 92 | 92 | 92 | 100 | 4 |
| 5 | 0 | 46 | 92 | 46 | 92 | 92 | 46 | 92 | 92 | 46 | 92 | 46 | 92 | 92 | 100 | 5 |
| ID | 29 | 15 | 6 | 16 | 17 | 7 | 19 | 18 | 8 | 20 | 9 | 21 | 10 | 11 | 22 | ID |
| t | 20.1 | 22.2 | 17.0 | 20.0 | 20.0 | 16.7 | 18.4 | 15.0 | 14.7 | 15.0 | 12.5 | 12.1 | 11.0 | 9.7 | 7.5 | t |
| [DEG] | 0～84 | 0～84 | 0～84 | 0～84 | 0～84 | 0～84 | 0～84 | 0～84 | 0～84 | 0～84 | 0～84 | 0～84 | 0～84 | 0～84 | 0～84 | [DEG] |
| | 5 | 5 | 4 | 4 | 4 | 4 | 4 | 3 | 3 | 3 | 3 | 3 | 3 | 3 | 3 | |
| | 35t | 35t | 35t | 35t | 35t | 35t | 35t | 35t | 35t | 35t | 35t | 35t | 35t | 35t | 35t | |

# ブーム

| MB | | 4.0 t | 7.2m | 360 ° | JPN |
|---|---|---|---|---|---|

| m | 10.2 | 13.7 | 13.7 | 17.2 | 17.2 | 17.2 | 17.2 | 20.7 | 20.7 | 20.7 | 20.7 | 24.2 | 24.2 | 24.2 | m |
|---|---|---|---|---|---|---|---|---|---|---|---|---|---|---|---|
| 1.6 | 75.00 | | | | | | | | | | | | | | 1.6 |
| 2.0 | 75.00 | 45.00 | 25.00 | 45.00 | 40.00 | 25.00 | 21.60 | 40.00 | 40.00 | 25.00 | 23.00 | 35.00 | 25.00 | 19.90 | 2.0 |
| 2.5 | 69.30 | 45.00 | 25.00 | 45.00 | 40.00 | 25.00 | 19.90 | 40.00 | 40.00 | 25.00 | 21.40 | 35.00 | 25.00 | 18.90 | 2.5 |
| 3.0 | 61.90 | 45.00 | 25.00 | 45.00 | 40.00 | 25.00 | 18.50 | 40.00 | 40.00 | 25.00 | 20.10 | 35.00 | 25.00 | 17.90 | 3.0 |
| 3.5 | 55.70 | 45.00 | 24.10 | 45.00 | 40.00 | 25.00 | 17.30 | 40.00 | 40.00 | 25.00 | 18.90 | 35.00 | 25.00 | 16.80 | 3.5 |
| 4.0 | 50.50 | 45.00 | 22.80 | 42.90 | 40.00 | 25.00 | 16.20 | 38.60 | 40.00 | 25.00 | 17.70 | 33.80 | 25.00 | 15.70 | 4.0 |
| 4.5 | 46.00 | 45.00 | 21.70 | 40.20 | 40.00 | 23.80 | 15.20 | 36.30 | 40.00 | 25.00 | 16.60 | 32.40 | 25.00 | 14.70 | 4.5 |
| 5.0 | 42.20 | 42.00 | 20.60 | 37.70 | 40.00 | 22.50 | 14.40 | 34.30 | 39.50 | 24.70 | 15.70 | 30.60 | 25.00 | 13.90 | 5.0 |
| 5.5 | 38.80 | 38.70 | 19.70 | 35.50 | 38.90 | 21.30 | 13.60 | 32.50 | 37.60 | 23.50 | 14.80 | 28.90 | 24.90 | 13.10 | 5.5 |
| 6.0 | 35.90 | 35.70 | 18.90 | 33.60 | 35.90 | 20.30 | 12.90 | 30.90 | 35.90 | 22.40 | 14.10 | 27.40 | 23.90 | 12.40 | 6.0 |
| 6.5 | 33.30 | 33.10 | 18.10 | 31.80 | 33.30 | 19.30 | 12.30 | 29.40 | 33.60 | 21.50 | 13.40 | 26.10 | 23.00 | 11.80 | 6.5 |
| 7.0 | 31.00 | 30.80 | 17.40 | 30.20 | 31.00 | 18.50 | 11.70 | 28.00 | 31.30 | 20.60 | 12.70 | 24.90 | 22.10 | 11.20 | 7.0 |
| 8.0 | | 26.00 | 16.20 | 25.70 | 26.50 | 16.90 | 10.70 | 25.40 | 27.10 | 19.00 | 11.60 | 22.70 | 20.50 | 10.20 | 8.0 |
| 9.0 | | 20.40 | 15.20 | 20.10 | 20.80 | 15.60 | 9.95 | 20.50 | 21.30 | 17.50 | 10.70 | 20.90 | 19.20 | 9.40 | 9.0 |
| 10.0 | | 16.60 | 14.50 | 16.30 | 16.90 | 14.60 | 9.20 | 16.60 | 17.40 | 16.30 | 9.95 | 17.10 | 18.00 | 8.65 | 10.0 |
| 11.0 | | | | 13.50 | 14.10 | 13.60 | 8.60 | 13.80 | 14.50 | 15.20 | 9.25 | 14.20 | 16.00 | 8.05 | 11.0 |
| 12.0 | | | | 11.30 | 11.90 | 12.80 | 8.10 | 11.60 | 12.30 | 13.80 | 8.65 | 12.00 | 13.70 | 7.50 | 12.0 |
| 14.0 | | | | 8.35 | 8.90 | 10.50 | 7.30 | 8.60 | 9.25 | 10.60 | 7.70 | 8.95 | 10.50 | 6.60 | 14.0 |
| 16.0 | | | | | | | | 6.55 | 7.15 | 8.40 | 6.90 | 6.90 | 8.30 | 5.90 | 16.0 |
| 18.0 | | | | | | | | | | | | 5.40 | 6.75 | 5.30 | 18.0 |
| 20.0 | | | | | | | | | | | | 4.25 | 5.60 | 4.85 | 20.0 |
| 21.0 | | | | | | | | | | | | 3.80 | 5.10 | 4.65 | 21.0 |
| 22.0 | | | | | | | | | | | | | | | 22.0 |
| 24.0 | | | | | | | | | | | | | | | 24.0 |
| 26.0 | | | | | | | | | | | | | | | 26.0 |
| 28.0 | | | | | | | | | | | | | | | 28.0 |
| 30.0 | | | | | | | | | | | | | | | 30.0 |
| 31.0 | | | | | | | | | | | | | | | 31.0 |
| 32.0 | | | | | | | | | | | | | | | 32.0 |
| 34.0 | | | | | | | | | | | | | | | 34.0 |
| 35.0 | | | | | | | | | | | | | | | 35.0 |
| 36.0 | | | | | | | | | | | | | | | 36.0 |
| 38.0 | | | | | | | | | | | | | | | 38.0 |
| 40.0 | | | | | | | | | | | | | | | 40.0 |
| 42.0 | | | | | | | | | | | | | | | 42.0 |
| 44.0 | | | | | | | | | | | | | | | 44.0 |
| 1 | 0 | 46 | 0 | 92 | 46 | 0 | 0 | 92 | 46 | 0 | 0 | 92 | 0 | 0 | 1 |
| 2 | 0 | 0 | 0 | 0 | 46 | 0 | 0 | 46 | 46 | 0 | 0 | 46 | 46 | 0 | 2 |
| 3 | 0 | 0 | 0 | 0 | 0 | 0 | 0 | 0 | 46 | 46 | 0 | 46 | 46 | 0 | 3 |
| 4 | 0 | 0 | 0 | 0 | 0 | 46 | 0 | 0 | 0 | 46 | 46 | 0 | 46 | 92 | 4 |
| 5 | 0 | 0 | 46 | 0 | 0 | 46 | 92 | 0 | 0 | 46 | 92 | 0 | 46 | 92 | 5 |
| ID | 1 | 23 | 2 | 24 | 25 | 12 | 3 | 26 | 27 | 13 | 4 | 28 | 14 | 5 | ID |
| t | 20.7 | 24.3 | 19.9 | 20.5 | 24.0 | 19.1 | 17.8 | 20.6 | 23.6 | 18.0 | 18.8 | 20.5 | 24.2 | 17.3 | t |
| [DEG] | 0～84 | 0～84 | 0～84 | 0～84 | 0～84 | 0～84 | 0～84 | 0～84 | 0～84 | 0～84 | 0～84 | 0～84 | 0～84 | 0～84 | [DEG] |
| | 20 | 9 | 5 | 9 | 8 | 5 | 5 | 8 | 8 | 5 | 5 | 7 | 5 | 4 | |
| | 重荷重装置 | 50t | 35t | 50t | 50t | 35t | 35t | 50t | 50t | 35t | 35t | 50t | 35t | 35t | |

| m | 27.7 | 27.7 | 27.7 | 31.2 | 31.2 | 31.2 | 34.7 | 34.7 | 34.7 | 38.2 | 38.2 | 41.7 | 41.7 | 45.2 | 48.0 | m |
|---|---|---|---|---|---|---|---|---|---|---|---|---|---|---|---|---|
| 1.6 | | | | | | | | | | | | | | | | 1.6 |
| 2.0 | | | | | | | | | | | | | | | | 2.0 |
| 2.5 | 25.00 | 25.00 | 18.40 | | | | | | | | | | | | | 2.5 |
| 3.0 | 25.00 | 25.00 | 17.60 | 20.00 | 20.00 | 16.70 | | | | | | | | | | 3.0 |
| 3.5 | 25.00 | 25.00 | 16.90 | 20.00 | 19.80 | 16.10 | 18.40 | 15.00 | 14.70 | | | | | | | 3.5 |
| 4.0 | 25.00 | 25.00 | 16.20 | 20.00 | 19.20 | 15.60 | 18.40 | 15.00 | 14.70 | 15.00 | 12.50 | | | | | 4.0 |
| 4.5 | 25.00 | 25.00 | 15.60 | 20.00 | 18.60 | 15.10 | 18.40 | 14.90 | 14.40 | 15.00 | 12.50 | | | | | 4.5 |
| 5.0 | 25.00 | 25.00 | 14.80 | 20.00 | 18.10 | 14.60 | 18.40 | 14.50 | 14.10 | 15.00 | 12.50 | 12.10 | 11.00 | | | 5.0 |
| 5.5 | 25.00 | 25.00 | 14.00 | 20.00 | 17.60 | 14.20 | 18.40 | 14.20 | 13.70 | 15.00 | 12.50 | 12.10 | 11.00 | 9.70 | 7.50 | 5.5 |
| 6.0 | 24.90 | 24.90 | 13.30 | 20.00 | 17.10 | 13.60 | 18.40 | 13.80 | 13.40 | 15.00 | 12.50 | 12.10 | 11.00 | 9.70 | 7.50 | 6.0 |
| 6.5 | 24.00 | 24.10 | 12.70 | 20.00 | 16.40 | 13.00 | 18.40 | 13.40 | 13.00 | 15.00 | 12.50 | 12.10 | 11.00 | 9.70 | 7.50 | 6.5 |
| 7.0 | 22.90 | 23.20 | 12.10 | 20.00 | 15.80 | 12.30 | 18.10 | 13.00 | 12.70 | 15.00 | 12.20 | 12.10 | 11.00 | 9.70 | 7.50 | 7.0 |
| 8.0 | 21.00 | 21.70 | 11.10 | 19.20 | 14.70 | 11.30 | 16.80 | 12.40 | 11.90 | 14.90 | 11.70 | 12.10 | 11.00 | 9.70 | 7.50 | 8.0 |
| 9.0 | 19.30 | 20.40 | 10.30 | 18.00 | 13.70 | 10.30 | 15.60 | 11.60 | 11.00 | 14.10 | 11.20 | 12.10 | 10.90 | 9.70 | 7.50 | 9.0 |
| 10.0 | 17.70 | 18.60 | 9.55 | 16.80 | 12.90 | 9.55 | 14.50 | 10.90 | 10.20 | 13.20 | 10.60 | 11.90 | 10.60 | 9.70 | 7.50 | 10.0 |
| 11.0 | 14.80 | 15.60 | 8.90 | 15.30 | 12.10 | 8.85 | 13.60 | 10.20 | 9.50 | 12.40 | 9.95 | 11.30 | 10.20 | 9.70 | 7.50 | 11.0 |
| 12.0 | 12.60 | 13.40 | 8.35 | 13.10 | 11.40 | 8.25 | 12.80 | 9.65 | 8.90 | 11.60 | 9.35 | 10.70 | 9.65 | 9.60 | 7.50 | 12.0 |
| 14.0 | 9.45 | 10.20 | 7.40 | 9.95 | 10.30 | 7.25 | 9.90 | 8.65 | 7.90 | 10.10 | 8.25 | 9.55 | 8.65 | 8.85 | 7.15 | 14.0 |
| 16.0 | 7.30 | 8.05 | 6.60 | 7.75 | 8.40 | 6.45 | 7.75 | 7.80 | 7.05 | 7.90 | 7.35 | 8.10 | 7.75 | 8.10 | 6.50 | 16.0 |
| 18.0 | 5.80 | 6.50 | 6.00 | 6.20 | 6.85 | 5.80 | 6.20 | 7.00 | 6.35 | 6.35 | 6.55 | 6.55 | 7.00 | 6.75 | 5.95 | 18.0 |
| 20.0 | 4.65 | 5.30 | 5.50 | 5.05 | 5.65 | 5.25 | 5.05 | 5.80 | 5.80 | 5.15 | 5.90 | 5.35 | 5.80 | 5.55 | 5.30 | 20.0 |
| 21.0 | 4.15 | 4.85 | 5.25 | 4.55 | 5.15 | 5.00 | 4.55 | 5.35 | 5.55 | 4.70 | 5.40 | 4.85 | 5.30 | 5.05 | 5.00 | 21.0 |
| 22.0 | 3.75 | 4.40 | 5.05 | 4.15 | 4.70 | 4.75 | 4.10 | 4.90 | 5.15 | 4.25 | 4.95 | 4.40 | 4.85 | 4.60 | 4.60 | 22.0 |
| 24.0 | 3.05 | 3.70 | 4.50 | 3.40 | 3.95 | 4.40 | 3.40 | 4.15 | 4.40 | 3.50 | 4.20 | 3.65 | 4.10 | 3.85 | 3.85 | 24.0 |
| 26.0 | | | | 2.80 | 3.35 | 3.80 | 2.80 | 3.50 | 3.75 | 2.90 | 3.60 | 3.05 | 3.45 | 3.25 | 3.25 | 26.0 |
| 28.0 | | | | 2.30 | 2.90 | 3.30 | 2.30 | 3.00 | 3.25 | 2.40 | 3.05 | 2.55 | 2.95 | 2.75 | 2.75 | 28.0 |
| 30.0 | | | | | | | 1.85 | 2.60 | 2.80 | 1.95 | 2.65 | 2.10 | 2.50 | 2.30 | 2.30 | 30.0 |
| 31.0 | | | | | | | 1.65 | 2.40 | 2.65 | 1.75 | 2.45 | 1.90 | 2.35 | 2.10 | 2.10 | 31.0 |
| 32.0 | | | | | | | | | | 1.55 | 2.30 | 1.70 | 2.15 | 1.90 | 1.90 | 32.0 |
| 34.0 | | | | | | | | | | 1.25 | 1.95 | 1.40 | 1.80 | 1.55 | 1.55 | 34.0 |
| 35.0 | | | | | | | | | | 1.10 | 1.80 | 1.25 | 1.65 | 1.40 | 1.40 | 35.0 |
| 36.0 | | | | | | | | | | | | 1.10 | 1.50 | 1.30 | 1.25 | 36.0 |
| 38.0 | | | | | | | | | | | | 0.85 | 1.30 | 1.00 | 1.00 | 38.0 |
| 40.0 | | | | | | | | | | | | | | 0.80 | 0.80 | 40.0 |
| 42.0 | | | | | | | | | | | | | | 0.60 | 0.60 | 42.0 |
| 44.0 | | | | | | | | | | | | | | | | 44.0 |
| 1 | 92 | 46 | 0 | 92 | 46 | 0 | 92 | 46 | 0 | 92 | 0 | 92 | 46 | 92 | 100 | 1 |
| 2 | 46 | 46 | 0 | 46 | 46 | 0 | 92 | 46 | 46 | 92 | 92 | 92 | 92 | 92 | 100 | 2 |
| 3 | 46 | 46 | 46 | 46 | 46 | 92 | 46 | 46 | 92 | 92 | 92 | 92 | 92 | 92 | 100 | 3 |
| 4 | 46 | 46 | 92 | 46 | 46 | 92 | 46 | 92 | 92 | 46 | 92 | 92 | 92 | 92 | 100 | 4 |
| 5 | 0 | 46 | 92 | 46 | 92 | 92 | 46 | 92 | 92 | 46 | 92 | 46 | 92 | 92 | 100 | 5 |
| ID | 29 | 15 | 6 | 16 | 17 | 7 | 19 | 18 | 8 | 20 | 9 | 21 | 10 | 11 | 22 | ID |
| t | 20.1 | 22.2 | 17.0 | 20.0 | 20.0 | 16.7 | 18.4 | 15.0 | 14.7 | 15.0 | 12.5 | 12.1 | 11.0 | 9.7 | 7.5 | t |
| [DEG] | 0～84 | 0～84 | 0～84 | 0～84 | 0～84 | 0～84 | 0～84 | 0～84 | 0～84 | 0～84 | 0～84 | 0～84 | 0～84 | 0～84 | 0～84 | [DEG] |
| | 5 | 5 | 4 | 4 | 4 | 4 | 4 | 3 | 3 | 3 | 3 | 3 | 3 | 3 | 3 | |
| | 35t | 35t | 35t | 35t | 35t | 35t | 35t | 35t | 35t | 35t | 35t | 35t | 35t | 35t | 35t | |

| MB | | 4.0 t | 6.4m | 360 ° | JPN |
|---|---|---|---|---|---|

| m | 10.2 | 13.7 | 13.7 | 17.2 | 17.2 | 17.2 | 17.2 | 20.7 | 20.7 | 20.7 | 20.7 | 24.2 | 24.2 | 24.2 | m |
|---|---|---|---|---|---|---|---|---|---|---|---|---|---|---|---|
| 1.6 | 75.00 | | | | | | | | | | | | | | 1.6 |
| 2.0 | 75.00 | 45.00 | 25.00 | 45.00 | 40.00 | 25.00 | 21.60 | 40.00 | 40.00 | 25.00 | 23.00 | 35.00 | 25.00 | 19.90 | 2.0 |
| 2.5 | 66.80 | 45.00 | 25.00 | 45.00 | 40.00 | 25.00 | 19.90 | 40.00 | 40.00 | 25.00 | 21.40 | 35.00 | 25.00 | 18.90 | 2.5 |
| 3.0 | 59.40 | 45.00 | 25.00 | 45.00 | 40.00 | 25.00 | 18.50 | 40.00 | 40.00 | 25.00 | 20.10 | 35.00 | 25.00 | 17.90 | 3.0 |
| 3.5 | 53.30 | 45.00 | 24.10 | 45.00 | 40.00 | 25.00 | 17.30 | 40.00 | 40.00 | 25.00 | 18.90 | 35.00 | 25.00 | 16.80 | 3.5 |
| 4.0 | 48.10 | 45.00 | 22.80 | 42.90 | 40.00 | 25.00 | 16.20 | 38.60 | 40.00 | 25.00 | 17.70 | 33.80 | 25.00 | 15.70 | 4.0 |
| 4.5 | 43.70 | 43.60 | 21.70 | 40.20 | 40.00 | 23.80 | 15.20 | 36.30 | 40.00 | 25.00 | 16.60 | 32.40 | 25.00 | 14.70 | 4.5 |
| 5.0 | 40.00 | 39.80 | 20.60 | 37.70 | 40.00 | 22.50 | 14.40 | 34.30 | 39.50 | 24.70 | 15.70 | 30.60 | 25.00 | 13.90 | 5.0 |
| 5.5 | 36.70 | 36.60 | 19.70 | 35.50 | 36.80 | 21.30 | 13.60 | 32.50 | 37.10 | 23.50 | 14.80 | 28.90 | 24.90 | 13.10 | 5.5 |
| 6.0 | 33.90 | 33.70 | 18.90 | 33.60 | 33.90 | 20.30 | 12.90 | 30.90 | 34.20 | 22.40 | 14.10 | 27.40 | 23.90 | 12.40 | 6.0 |
| 6.5 | 31.40 | 31.20 | 18.10 | 31.00 | 31.40 | 19.30 | 12.30 | 29.40 | 31.70 | 21.50 | 13.40 | 26.10 | 23.00 | 11.80 | 6.5 |
| 7.0 | 28.20 | 27.80 | 17.40 | 27.50 | 28.30 | 18.50 | 11.70 | 27.70 | 28.80 | 20.60 | 12.70 | 24.90 | 22.10 | 11.20 | 7.0 |
| 8.0 | | 21.10 | 16.20 | 20.80 | 21.50 | 16.90 | 10.70 | 21.20 | 22.00 | 19.00 | 11.60 | 21.70 | 20.50 | 10.20 | 8.0 |
| 9.0 | | 16.70 | 15.20 | 16.40 | 17.10 | 15.60 | 9.95 | 16.80 | 17.60 | 17.50 | 10.70 | 17.20 | 19.10 | 9.40 | 9.0 |
| 10.0 | | 13.60 | 14.50 | 13.30 | 13.90 | 14.60 | 9.20 | 13.70 | 14.40 | 15.90 | 9.95 | 14.10 | 15.80 | 8.65 | 10.0 |
| 11.0 | | | | 11.00 | 11.60 | 13.40 | 8.60 | 11.30 | 12.00 | 13.50 | 9.25 | 11.80 | 13.40 | 8.05 | 11.0 |
| 12.0 | | | | 9.30 | 9.85 | 11.50 | 8.10 | 9.60 | 10.20 | 11.60 | 8.65 | 10.00 | 11.50 | 7.50 | 12.0 |
| 14.0 | | | | 6.80 | 7.30 | 8.85 | 7.30 | 7.00 | 7.65 | 8.95 | 7.70 | 7.40 | 8.85 | 6.60 | 14.0 |
| 16.0 | | | | | | | | 5.30 | 5.90 | 7.10 | 6.90 | 5.60 | 7.00 | 5.90 | 16.0 |
| 18.0 | | | | | | | | | | | | 4.35 | 5.65 | 5.30 | 18.0 |
| 20.0 | | | | | | | | | | | | 3.35 | 4.65 | 4.85 | 20.0 |
| 21.0 | | | | | | | | | | | | 2.95 | 4.25 | 4.65 | 21.0 |
| 22.0 | | | | | | | | | | | | | | | 22.0 |
| 24.0 | | | | | | | | | | | | | | | 24.0 |
| 26.0 | | | | | | | | | | | | | | | 26.0 |
| 28.0 | | | | | | | | | | | | | | | 28.0 |
| 30.0 | | | | | | | | | | | | | | | 30.0 |
| 31.0 | | | | | | | | | | | | | | | 31.0 |
| 32.0 | | | | | | | | | | | | | | | 32.0 |
| 34.0 | | | | | | | | | | | | | | | 34.0 |
| 35.0 | | | | | | | | | | | | | | | 35.0 |
| 36.0 | | | | | | | | | | | | | | | 36.0 |
| 38.0 | | | | | | | | | | | | | | | 38.0 |
| 40.0 | | | | | | | | | | | | | | | 40.0 |
| 42.0 | | | | | | | | | | | | | | | 42.0 |
| 44.0 | | | | | | | | | | | | | | | 44.0 |
| 1 | 0 | 46 | 0 | 92 | 46 | 0 | 0 | 92 | 46 | 0 | 0 | 92 | 0 | 0 | 1 |
| 2 | 0 | 0 | 0 | 0 | 46 | 0 | 0 | 46 | 46 | 0 | 0 | 46 | 46 | 0 | 2 |
| 3 | 0 | 0 | 0 | 0 | 0 | 0 | 0 | 0 | 46 | 46 | 0 | 46 | 46 | 0 | 3 |
| 4 | 0 | 0 | 0 | 0 | 0 | 46 | 0 | 0 | 0 | 46 | 46 | 0 | 46 | 92 | 4 |
| 5 | 0 | 0 | 46 | 0 | 0 | 46 | 92 | 0 | 0 | 46 | 92 | 0 | 46 | 92 | 5 |
| ID | 1 | 23 | 2 | 24 | 25 | 12 | 3 | 26 | 27 | 13 | 4 | 28 | 14 | 5 | ID |
| t | 20.7 | 24.3 | 19.9 | 20.5 | 24.0 | 19.1 | 17.8 | 20.6 | 23.6 | 18.0 | 18.8 | 20.5 | 24.2 | 17.3 | t |
| [DEG] | 0～84 | 0～84 | 0～84 | 0～84 | 0～84 | 0～84 | 0～84 | 0～84 | 0～84 | 0～84 | 0～84 | 0～84 | 0～84 | 0～84 | [DEG] |
| | 20 | 9 | 5 | 9 | 8 | 5 | 5 | 8 | 8 | 5 | 5 | 7 | 5 | 4 | |
| | 重荷重装置 | 50t | 35t | 50t | 50t | 35t | 35t | 50t | 50t | 35t | 35t | 50t | 35t | 35t | |

| m | 27.7 | 27.7 | 27.7 | 31.2 | 31.2 | 31.2 | 34.7 | 34.7 | 34.7 | 38.2 | 38.2 | 41.7 | 41.7 | 45.2 | 48.0 | m |
|---|---|---|---|---|---|---|---|---|---|---|---|---|---|---|---|---|
| 1.6 | | | | | | | | | | | | | | | | 1.6 |
| 2.0 | | | | | | | | | | | | | | | | 2.0 |
| 2.5 | 25.00 | 25.00 | 18.40 | | | | | | | | | | | | | 2.5 |
| 3.0 | 25.00 | 25.00 | 17.60 | 20.00 | 20.00 | 16.70 | | | | | | | | | | 3.0 |
| 3.5 | 25.00 | 25.00 | 16.90 | 20.00 | 19.80 | 16.10 | 18.40 | 15.00 | 14.70 | | | | | | | 3.5 |
| 4.0 | 25.00 | 25.00 | 16.20 | 20.00 | 19.20 | 15.60 | 18.40 | 15.00 | 14.70 | 15.00 | 12.50 | | | | | 4.0 |
| 4.5 | 25.00 | 25.00 | 15.60 | 20.00 | 18.60 | 15.10 | 18.40 | 14.90 | 14.40 | 15.00 | 12.50 | | | | | 4.5 |
| 5.0 | 25.00 | 25.00 | 14.80 | 20.00 | 18.10 | 14.60 | 18.40 | 14.50 | 14.10 | 15.00 | 12.50 | 12.10 | 11.00 | | | 5.0 |
| 5.5 | 25.00 | 25.00 | 14.00 | 20.00 | 17.60 | 14.20 | 18.40 | 14.20 | 13.70 | 15.00 | 12.50 | 12.10 | 11.00 | 9.70 | 7.50 | 5.5 |
| 6.0 | 24.90 | 24.90 | 13.30 | 20.00 | 17.10 | 13.60 | 18.40 | 13.80 | 13.40 | 15.00 | 12.50 | 12.10 | 11.00 | 9.70 | 7.50 | 6.0 |
| 6.5 | 24.00 | 24.10 | 12.70 | 20.00 | 16.40 | 13.00 | 18.40 | 13.40 | 13.00 | 15.00 | 12.50 | 12.10 | 11.00 | 9.70 | 7.50 | 6.5 |
| 7.0 | 22.90 | 23.20 | 12.10 | 20.00 | 15.80 | 12.30 | 18.10 | 13.00 | 12.70 | 15.00 | 12.20 | 12.10 | 11.00 | 9.70 | 7.50 | 7.0 |
| 8.0 | 21.00 | 21.70 | 11.10 | 19.20 | 14.70 | 11.30 | 16.80 | 12.40 | 11.90 | 14.90 | 11.70 | 12.10 | 11.00 | 9.70 | 7.50 | 8.0 |
| 9.0 | 17.90 | 18.80 | 10.30 | 18.00 | 13.70 | 10.30 | 15.60 | 11.60 | 11.00 | 14.10 | 11.20 | 12.10 | 10.90 | 9.70 | 7.50 | 9.0 |
| 10.0 | 14.70 | 15.50 | 9.55 | 15.20 | 12.90 | 9.55 | 14.50 | 10.90 | 10.20 | 13.20 | 10.60 | 11.90 | 10.60 | 9.70 | 7.50 | 10.0 |
| 11.0 | 12.30 | 13.10 | 8.90 | 12.80 | 12.10 | 8.85 | 12.80 | 10.20 | 9.50 | 12.40 | 9.95 | 11.30 | 10.20 | 9.70 | 7.50 | 11.0 |
| 12.0 | 10.50 | 11.30 | 8.35 | 11.00 | 11.40 | 8.25 | 11.00 | 9.65 | 8.90 | 11.10 | 9.35 | 10.70 | 9.65 | 9.60 | 7.50 | 12.0 |
| 14.0 | 7.85 | 8.60 | 7.40 | 8.30 | 8.95 | 7.25 | 8.30 | 8.65 | 7.90 | 8.45 | 8.25 | 8.65 | 8.65 | 8.85 | 7.15 | 14.0 |
| 16.0 | 6.05 | 6.75 | 6.60 | 6.50 | 7.10 | 6.45 | 6.45 | 7.30 | 7.05 | 6.60 | 7.35 | 6.80 | 7.25 | 7.00 | 6.50 | 16.0 |
| 18.0 | 4.75 | 5.40 | 6.00 | 5.15 | 5.75 | 5.80 | 5.15 | 5.95 | 6.20 | 5.25 | 6.00 | 5.45 | 5.90 | 5.65 | 5.65 | 18.0 |
| 20.0 | 3.75 | 4.40 | 5.25 | 4.15 | 4.70 | 5.15 | 4.10 | 4.90 | 5.15 | 4.25 | 4.95 | 4.40 | 4.85 | 4.60 | 4.60 | 20.0 |
| 21.0 | 3.30 | 3.95 | 4.80 | 3.70 | 4.30 | 4.70 | 3.70 | 4.45 | 4.70 | 3.80 | 4.55 | 4.00 | 4.40 | 4.20 | 4.20 | 21.0 |
| 22.0 | 2.95 | 3.60 | 4.40 | 3.35 | 3.90 | 4.30 | 3.30 | 4.05 | 4.30 | 3.45 | 4.15 | 3.60 | 4.00 | 3.80 | 3.80 | 22.0 |
| 24.0 | 2.30 | 3.00 | 3.80 | 2.70 | 3.25 | 3.65 | 2.70 | 3.40 | 3.65 | 2.80 | 3.50 | 2.95 | 3.35 | 3.15 | 3.15 | 24.0 |
| 26.0 | | | | 2.15 | 2.75 | 3.15 | 2.10 | 2.85 | 3.10 | 2.25 | 2.95 | 2.40 | 2.80 | 2.60 | 2.60 | 26.0 |
| 28.0 | | | | 1.70 | 2.30 | 2.70 | 1.65 | 2.40 | 2.65 | 1.75 | 2.50 | 1.95 | 2.35 | 2.15 | 2.15 | 28.0 |
| 30.0 | | | | | | | 1.25 | 2.05 | 2.30 | 1.35 | 2.10 | 1.55 | 2.00 | 1.75 | 1.75 | 30.0 |
| 31.0 | | | | | | | 1.10 | 1.90 | 2.10 | 1.20 | 1.95 | 1.35 | 1.80 | 1.55 | 1.55 | 31.0 |
| 32.0 | | | | | | | | | | 1.05 | 1.75 | 1.20 | 1.65 | 1.40 | 1.40 | 32.0 |
| 34.0 | | | | | | | | | | 0.75 | 1.45 | 0.90 | 1.35 | 1.10 | 1.10 | 34.0 |
| 35.0 | | | | | | | | | | 0.65 | 1.35 | 0.75 | 1.20 | 0.95 | 0.95 | 35.0 |
| 36.0 | | | | | | | | | | | | 0.65 | 1.05 | 0.80 | 0.80 | 36.0 |
| 38.0 | | | | | | | | | | | | | 0.85 | 0.60 | 0.60 | 38.0 |
| 40.0 | | | | | | | | | | | | | | | | 40.0 |
| 42.0 | | | | | | | | | | | | | | | | 42.0 |
| 44.0 | | | | | | | | | | | | | | | | 44.0 |
| 1 | 92 | 46 | 0 | 92 | 46 | 0 | 92 | 46 | 0 | 92 | 0 | 92 | 46 | 92 | 100 | 1 |
| 2 | 46 | 46 | 0 | 46 | 46 | 0 | 92 | 46 | 46 | 92 | 92 | 92 | 92 | 92 | 100 | 2 |
| 3 | 46 | 46 | 46 | 46 | 46 | 92 | 46 | 46 | 92 | 92 | 92 | 92 | 92 | 92 | 100 | 3 |
| 4 | 46 | 46 | 92 | 46 | 46 | 92 | 46 | 92 | 92 | 46 | 92 | 92 | 92 | 92 | 100 | 4 |
| 5 | 0 | 46 | 92 | 46 | 92 | 92 | 46 | 92 | 92 | 46 | 92 | 46 | 92 | 92 | 100 | 5 |
| ID | 29 | 15 | 6 | 16 | 17 | 7 | 19 | 18 | 8 | 20 | 9 | 21 | 10 | 11 | 22 | ID |
| t | 20.1 | 22.2 | 17.0 | 20.0 | 20.0 | 16.7 | 18.4 | 15.0 | 14.7 | 15.0 | 12.5 | 12.1 | 11.0 | 9.7 | 7.5 | t |
| [DEG] | 0～84 | 0～84 | 0～84 | 0～84 | 0～84 | 0～84 | 0～84 | 0～84 | 0～84 | 0～84 | 0～84 | 0～84 | 0～84 | 24～84 | 33～84 | [DEG] |
| | 5 | 5 | 4 | 4 | 4 | 4 | 4 | 3 | 3 | 3 | 3 | 3 | 3 | 3 | 3 | |
| | 35t | 35t | 35t | 35t | 35t | 35t | 35t | 35t | 35t | 35t | 35t | 35t | 35t | 35t | 35t | |

# ブーム

| MB | | 4.0 t | 5.38m | 360 ° | JPN |
|---|---|---|---|---|---|

| m | 10.2 | 13.7 | 13.7 | 17.2 | 17.2 | 17.2 | 17.2 | 20.7 | 20.7 | 20.7 | 20.7 | 24.2 | 24.2 | 24.2 | m |
|---|---|---|---|---|---|---|---|---|---|---|---|---|---|---|---|
| 1.6 | 75.00 | | | | | | | | | | | | | | 1.6 |
| 2.0 | 72.00 | 45.00 | 25.00 | 45.00 | 40.00 | 25.00 | 21.60 | 40.00 | 40.00 | 25.00 | 23.00 | 35.00 | 25.00 | 19.90 | 2.0 |
| 2.5 | 62.90 | 45.00 | 25.00 | 45.00 | 40.00 | 25.00 | 19.90 | 40.00 | 40.00 | 25.00 | 21.40 | 35.00 | 25.00 | 18.90 | 2.5 |
| 3.0 | 55.60 | 45.00 | 25.00 | 45.00 | 40.00 | 25.00 | 18.50 | 40.00 | 40.00 | 25.00 | 20.10 | 35.00 | 25.00 | 17.90 | 3.0 |
| 3.5 | 49.50 | 45.00 | 24.10 | 45.00 | 40.00 | 25.00 | 17.30 | 40.00 | 40.00 | 25.00 | 18.90 | 35.00 | 25.00 | 16.80 | 3.5 |
| 4.0 | 44.50 | 44.40 | 22.80 | 42.90 | 40.00 | 25.00 | 16.20 | 38.60 | 40.00 | 25.00 | 17.70 | 33.80 | 25.00 | 15.70 | 4.0 |
| 4.5 | 40.30 | 40.10 | 21.70 | 40.00 | 40.00 | 23.80 | 15.20 | 36.30 | 40.00 | 25.00 | 16.60 | 32.40 | 25.00 | 14.70 | 4.5 |
| 5.0 | 36.70 | 36.50 | 20.60 | 36.40 | 36.80 | 22.50 | 14.40 | 34.30 | 37.10 | 24.70 | 15.70 | 30.60 | 25.00 | 13.90 | 5.0 |
| 5.5 | 33.60 | 33.40 | 19.70 | 32.10 | 33.00 | 21.30 | 13.60 | 30.90 | 32.10 | 23.50 | 14.80 | 28.90 | 24.90 | 13.10 | 5.5 |
| 6.0 | 28.30 | 28.00 | 18.90 | 27.60 | 28.50 | 20.30 | 12.90 | 26.80 | 27.90 | 22.40 | 14.10 | 26.20 | 23.90 | 12.40 | 6.0 |
| 6.5 | 24.10 | 23.70 | 18.10 | 23.40 | 24.20 | 19.30 | 12.30 | 23.50 | 24.50 | 21.50 | 13.40 | 23.10 | 23.00 | 11.80 | 6.5 |
| 7.0 | 20.80 | 20.50 | 17.40 | 20.20 | 20.90 | 18.50 | 11.70 | 20.60 | 21.40 | 20.60 | 12.70 | 20.60 | 22.10 | 11.20 | 7.0 |
| 8.0 | | 15.80 | 16.20 | 15.50 | 16.20 | 16.90 | 10.70 | 15.90 | 16.60 | 18.30 | 11.60 | 16.30 | 18.20 | 10.20 | 8.0 |
| 9.0 | | 12.60 | 14.10 | 12.30 | 12.90 | 14.70 | 9.95 | 12.60 | 13.40 | 14.90 | 10.70 | 13.10 | 14.80 | 9.40 | 9.0 |
| 10.0 | | 10.30 | 11.70 | 10.00 | 10.60 | 12.30 | 9.20 | 10.30 | 11.00 | 12.50 | 9.95 | 10.70 | 12.40 | 8.65 | 10.0 |
| 11.0 | | | | 8.30 | 8.85 | 10.40 | 8.60 | 8.60 | 9.25 | 10.60 | 9.25 | 9.00 | 10.50 | 8.05 | 11.0 |
| 12.0 | | | | 6.95 | 7.45 | 9.00 | 8.10 | 7.20 | 7.85 | 9.15 | 8.65 | 7.60 | 9.05 | 7.50 | 12.0 |
| 14.0 | | | | 4.95 | 5.45 | 6.90 | 6.90 | 5.15 | 5.75 | 7.00 | 7.35 | 5.50 | 6.90 | 6.60 | 14.0 |
| 16.0 | | | | | | | | 3.75 | 4.35 | 5.55 | 5.85 | 4.10 | 5.45 | 5.90 | 16.0 |
| 18.0 | | | | | | | | | | | | 3.05 | 4.35 | 4.80 | 18.0 |
| 20.0 | | | | | | | | | | | | 2.20 | 3.50 | 3.95 | 20.0 |
| 21.0 | | | | | | | | | | | | 1.90 | 3.20 | 3.65 | 21.0 |
| 22.0 | | | | | | | | | | | | | | | 22.0 |
| 24.0 | | | | | | | | | | | | | | | 24.0 |
| 26.0 | | | | | | | | | | | | | | | 26.0 |
| 28.0 | | | | | | | | | | | | | | | 28.0 |
| 30.0 | | | | | | | | | | | | | | | 30.0 |
| 31.0 | | | | | | | | | | | | | | | 31.0 |
| 32.0 | | | | | | | | | | | | | | | 32.0 |
| 34.0 | | | | | | | | | | | | | | | 34.0 |
| 35.0 | | | | | | | | | | | | | | | 35.0 |
| 36.0 | | | | | | | | | | | | | | | 36.0 |
| 38.0 | | | | | | | | | | | | | | | 38.0 |
| 40.0 | | | | | | | | | | | | | | | 40.0 |
| 42.0 | | | | | | | | | | | | | | | 42.0 |
| 44.0 | | | | | | | | | | | | | | | 44.0 |
| 1 | 0 | 46 | 0 | 92 | 46 | 0 | 0 | 92 | 46 | 0 | 0 | 92 | 0 | 0 | 1 |
| 2 | 0 | 0 | 0 | 0 | 46 | 0 | 0 | 46 | 46 | 0 | 0 | 46 | 46 | 0 | 2 |
| 3 | 0 | 0 | 0 | 0 | 0 | 0 | 0 | 0 | 46 | 46 | 0 | 46 | 46 | 0 | 3 |
| 4 | 0 | 0 | 0 | 0 | 0 | 46 | 0 | 0 | 0 | 46 | 46 | 0 | 46 | 92 | 4 |
| 5 | 0 | 0 | 46 | 0 | 0 | 46 | 92 | 0 | 0 | 46 | 92 | 0 | 46 | 92 | 5 |
| ID | 1 | 23 | 2 | 24 | 25 | 12 | 3 | 26 | 27 | 13 | 4 | 28 | 14 | 5 | ID |
| t | 20.7 | 24.3 | 19.9 | 20.5 | 24.0 | 19.1 | 17.8 | 20.6 | 23.6 | 18.0 | 18.8 | 20.5 | 24.2 | 17.3 | t |
| [DEG] | 0～84 | 0～84 | 0～84 | 0～84 | 0～84 | 0～84 | 0～84 | 0～84 | 0～84 | 0～84 | 0～84 | 0～84 | 0～84 | 0～84 | [DEG] |
| | 20 | 9 | 5 | 9 | 8 | 5 | 5 | 8 | 8 | 5 | 5 | 7 | 5 | 4 | |
| | 重荷重装置 | 50t | 35t | 50t | 50t | 35t | 35t | 50t | 50t | 35t | 35t | 50t | 35t | 35t | |

| m | 27.7 | 27.7 | 27.7 | 31.2 | 31.2 | 31.2 | 34.7 | 34.7 | 34.7 | 38.2 | 38.2 | 41.7 | 41.7 | 45.2 | 48.0 | m |
|---|---|---|---|---|---|---|---|---|---|---|---|---|---|---|---|---|
| 1.6 | | | | | | | | | | | | | | | | 1.6 |
| 2.0 | | | | | | | | | | | | | | | | 2.0 |
| 2.5 | 25.00 | 25.00 | 18.40 | | | | | | | | | | | | | 2.5 |
| 3.0 | 25.00 | 25.00 | 17.60 | 20.00 | 20.00 | 16.70 | | | | | | | | | | 3.0 |
| 3.5 | 25.00 | 25.00 | 16.90 | 20.00 | 19.80 | 16.10 | 18.40 | 15.00 | 14.70 | | | | | | | 3.5 |
| 4.0 | 25.00 | 25.00 | 16.20 | 20.00 | 19.20 | 15.60 | 18.40 | 15.00 | 14.70 | 15.00 | 12.50 | | | | | 4.0 |
| 4.5 | 25.00 | 25.00 | 15.60 | 20.00 | 18.60 | 15.10 | 18.40 | 14.90 | 14.40 | 15.00 | 12.50 | | | | | 4.5 |
| 5.0 | 25.00 | 25.00 | 14.80 | 20.00 | 18.10 | 14.60 | 18.40 | 14.50 | 14.10 | 15.00 | 12.50 | 12.10 | 11.00 | | | 5.0 |
| 5.5 | 25.00 | 25.00 | 14.00 | 20.00 | 17.60 | 14.20 | 18.40 | 14.20 | 13.70 | 15.00 | 12.50 | 12.10 | 11.00 | 9.70 | 7.50 | 5.5 |
| 6.0 | 24.90 | 24.90 | 13.30 | 20.00 | 17.10 | 13.60 | 18.40 | 13.80 | 13.40 | 15.00 | 12.50 | 12.10 | 11.00 | 9.70 | 7.50 | 6.0 |
| 6.5 | 23.00 | 24.10 | 12.70 | 20.00 | 16.40 | 13.00 | 18.40 | 13.40 | 13.00 | 15.00 | 12.50 | 12.10 | 11.00 | 9.70 | 7.50 | 6.5 |
| 7.0 | 20.50 | 21.70 | 12.10 | 20.00 | 15.80 | 12.30 | 18.10 | 13.00 | 12.70 | 15.00 | 12.20 | 12.10 | 11.00 | 9.70 | 7.50 | 7.0 |
| 8.0 | 16.80 | 17.80 | 11.10 | 16.90 | 14.70 | 11.30 | 16.40 | 12.40 | 11.90 | 14.90 | 11.70 | 12.10 | 11.00 | 9.70 | 7.50 | 8.0 |
| 9.0 | 13.70 | 14.50 | 10.30 | 14.20 | 13.70 | 10.30 | 13.80 | 11.60 | 11.00 | 13.70 | 11.20 | 12.10 | 10.90 | 9.70 | 7.50 | 9.0 |
| 10.0 | 11.30 | 12.10 | 9.55 | 11.80 | 12.50 | 9.55 | 11.80 | 10.90 | 10.20 | 11.70 | 10.60 | 11.70 | 10.60 | 9.70 | 7.50 | 10.0 |
| 11.0 | 9.50 | 10.20 | 8.90 | 9.95 | 10.60 | 8.85 | 9.95 | 10.20 | 9.50 | 10.10 | 9.95 | 10.20 | 10.20 | 9.70 | 7.50 | 11.0 |
| 12.0 | 8.05 | 8.80 | 8.35 | 8.50 | 9.20 | 8.25 | 8.50 | 9.40 | 8.90 | 8.70 | 9.35 | 8.85 | 9.35 | 9.05 | 7.50 | 12.0 |
| 14.0 | 5.95 | 6.65 | 7.40 | 6.40 | 7.00 | 7.25 | 6.40 | 7.25 | 7.50 | 6.55 | 7.30 | 6.75 | 7.20 | 6.95 | 6.95 | 14.0 |
| 16.0 | 4.50 | 5.20 | 6.05 | 4.95 | 5.50 | 5.95 | 4.90 | 5.70 | 5.95 | 5.05 | 5.80 | 5.25 | 5.65 | 5.45 | 5.45 | 16.0 |
| 18.0 | 3.45 | 4.10 | 4.95 | 3.85 | 4.40 | 4.85 | 3.85 | 4.60 | 4.85 | 3.95 | 4.65 | 4.15 | 4.55 | 4.35 | 4.35 | 18.0 |
| 20.0 | 2.60 | 3.25 | 4.05 | 3.00 | 3.55 | 3.95 | 3.00 | 3.75 | 4.00 | 3.10 | 3.80 | 3.30 | 3.70 | 3.50 | 3.50 | 20.0 |
| 21.0 | 2.25 | 2.90 | 3.70 | 2.65 | 3.20 | 3.60 | 2.65 | 3.40 | 3.60 | 2.75 | 3.45 | 2.95 | 3.35 | 3.10 | 3.10 | 21.0 |
| 22.0 | 1.95 | 2.60 | 3.40 | 2.35 | 2.90 | 3.30 | 2.35 | 3.05 | 3.30 | 2.45 | 3.15 | 2.60 | 3.00 | 2.80 | 2.80 | 22.0 |
| 24.0 | 1.40 | 2.10 | 2.85 | 1.80 | 2.35 | 2.75 | 1.75 | 2.50 | 2.75 | 1.90 | 2.60 | 2.05 | 2.45 | 2.25 | 2.25 | 24.0 |
| 26.0 | | | | 1.30 | 1.90 | 2.30 | 1.30 | 2.05 | 2.30 | 1.40 | 2.15 | 1.60 | 2.00 | 1.80 | 1.80 | 26.0 |
| 28.0 | | | | 0.95 | 1.55 | 1.95 | 0.90 | 1.70 | 1.90 | 1.00 | 1.75 | 1.20 | 1.60 | 1.40 | 1.40 | 28.0 |
| 30.0 | | | | | | | 0.60 | 1.35 | 1.60 | 0.70 | 1.40 | 0.85 | 1.25 | 1.05 | 1.05 | 30.0 |
| 31.0 | | | | | | | | 1.20 | 1.45 | 0.55 | 1.25 | 0.70 | 1.10 | 0.90 | 0.90 | 31.0 |
| 32.0 | | | | | | | | | | | 1.10 | 0.55 | 1.00 | 0.75 | 0.75 | 32.0 |
| 34.0 | | | | | | | | | | | 0.85 | | 0.70 | 0.50 | | 34.0 |
| 35.0 | | | | | | | | | | | 0.75 | | 0.60 | | | 35.0 |
| 36.0 | | | | | | | | | | | | | 0.50 | | | 36.0 |
| 38.0 | | | | | | | | | | | | | | | | 38.0 |
| 40.0 | | | | | | | | | | | | | | | | 40.0 |
| 42.0 | | | | | | | | | | | | | | | | 42.0 |
| 44.0 | | | | | | | | | | | | | | | | 44.0 |
| 1 | 92 | 46 | 0 | 92 | 46 | 0 | 92 | 46 | 0 | 92 | 0 | 92 | 46 | 92 | 100 | 1 |
| 2 | 46 | 46 | 0 | 46 | 46 | 0 | 92 | 46 | 46 | 92 | 92 | 92 | 92 | 92 | 100 | 2 |
| 3 | 46 | 46 | 46 | 46 | 46 | 92 | 46 | 46 | 92 | 92 | 92 | 92 | 92 | 92 | 100 | 3 |
| 4 | 46 | 46 | 92 | 46 | 46 | 92 | 46 | 92 | 92 | 46 | 92 | 92 | 92 | 92 | 100 | 4 |
| 5 | 0 | 46 | 92 | 46 | 92 | 92 | 46 | 92 | 92 | 46 | 92 | 46 | 92 | 92 | 100 | 5 |
| ID | 29 | 15 | 6 | 16 | 17 | 7 | 19 | 18 | 8 | 20 | 9 | 21 | 10 | 11 | 22 | ID |
| t | 20.1 | 22.2 | 17.0 | 20.0 | 20.0 | 16.7 | 18.4 | 15.0 | 14.7 | 15.0 | 12.5 | 12.1 | 11.0 | 9.7 | 7.5 | t |
| [DEG] | 0～84 | 0～84 | 0～84 | 0～84 | 0～84 | 0～84 | 0～84 | 0～84 | 0～84 | 27～84 | 0～84 | 30～84 | 16～84 | 34～84 | 40～84 | [DEG] |
| | 5 | 5 | 4 | 4 | 4 | 4 | 4 | 3 | 3 | 3 | 3 | 3 | 3 | 3 | 3 | |
| | 35t | 35t | 35t | 35t | 35t | 35t | 35t | 35t | 35t | 35t | 35t | 35t | 35t | 35t | 35t | |

| MB | | 4.0 t | 4.18m | 360 ° | JPN |
|---|---|---|---|---|---|

| m | 10.2 | 13.7 | 13.7 | 17.2 | 17.2 | 17.2 | 17.2 | 20.7 | 20.7 | 20.7 | 20.7 | 24.2 | 24.2 | 24.2 | m |
|---|---|---|---|---|---|---|---|---|---|---|---|---|---|---|---|
| 1.6 | 75.00 | | | | | | | | | | | | | | 1.6 |
| 2.0 | 66.00 | 45.00 | 25.00 | 45.00 | 40.00 | 25.00 | 21.60 | 40.00 | 40.00 | 25.00 | 23.00 | 35.00 | 25.00 | 19.90 | 2.0 |
| 2.5 | 56.90 | 45.00 | 25.00 | 45.00 | 40.00 | 25.00 | 19.90 | 40.00 | 40.00 | 25.00 | 21.40 | 35.00 | 25.00 | 18.90 | 2.5 |
| 3.0 | 49.70 | 45.00 | 25.00 | 45.00 | 40.00 | 25.00 | 18.50 | 40.00 | 40.00 | 25.00 | 20.10 | 35.00 | 25.00 | 17.90 | 3.0 |
| 3.5 | 43.90 | 43.80 | 24.10 | 40.80 | 40.00 | 25.00 | 17.30 | 37.90 | 39.20 | 25.00 | 18.90 | 35.00 | 25.00 | 16.80 | 3.5 |
| 4.0 | 39.20 | 36.40 | 22.80 | 33.10 | 34.00 | 25.00 | 16.20 | 31.20 | 32.30 | 25.00 | 17.70 | 29.80 | 25.00 | 15.70 | 4.0 |
| 4.5 | 33.20 | 30.10 | 21.70 | 27.50 | 28.50 | 23.80 | 15.20 | 26.20 | 27.30 | 25.00 | 16.60 | 25.30 | 25.00 | 14.70 | 4.5 |
| 5.0 | 26.70 | 25.40 | 20.60 | 23.40 | 24.30 | 22.50 | 14.40 | 22.50 | 23.50 | 24.70 | 15.70 | 21.80 | 24.10 | 13.90 | 5.0 |
| 5.5 | 22.20 | 21.90 | 19.70 | 20.20 | 21.00 | 21.30 | 13.60 | 19.50 | 20.50 | 22.50 | 14.80 | 19.10 | 21.30 | 13.10 | 5.5 |
| 6.0 | 18.80 | 18.50 | 18.90 | 17.60 | 18.40 | 20.30 | 12.90 | 17.10 | 18.00 | 20.00 | 14.10 | 16.80 | 19.00 | 12.40 | 6.0 |
| 6.5 | 16.20 | 15.90 | 17.60 | 15.50 | 16.30 | 18.30 | 12.30 | 15.10 | 16.00 | 17.90 | 13.40 | 15.00 | 17.00 | 11.80 | 6.5 |
| 7.0 | 14.20 | 13.90 | 15.50 | 13.60 | 14.20 | 16.10 | 11.70 | 13.50 | 14.40 | 16.20 | 12.70 | 13.40 | 15.40 | 11.20 | 7.0 |
| 8.0 | | 10.80 | 12.20 | 10.50 | 11.10 | 12.90 | 10.70 | 10.80 | 11.50 | 13.00 | 11.60 | 10.90 | 12.80 | 10.20 | 8.0 |
| 9.0 | | 8.60 | 10.00 | 8.35 | 8.90 | 10.50 | 9.95 | 8.65 | 9.35 | 10.70 | 10.70 | 9.05 | 10.60 | 9.40 | 9.0 |
| 10.0 | | 7.00 | 8.30 | 6.75 | 7.25 | 8.85 | 8.85 | 7.00 | 7.65 | 9.00 | 9.35 | 7.40 | 8.90 | 8.65 | 10.0 |
| 11.0 | | | | 5.50 | 6.00 | 7.50 | 7.50 | 5.75 | 6.35 | 7.65 | 8.00 | 6.10 | 7.55 | 8.05 | 11.0 |
| 12.0 | | | | 4.50 | 4.95 | 6.45 | 6.45 | 4.75 | 5.35 | 6.55 | 6.90 | 5.10 | 6.50 | 7.00 | 12.0 |
| 14.0 | | | | 3.00 | 3.50 | 4.90 | 4.90 | 3.20 | 3.80 | 4.95 | 5.30 | 3.55 | 4.90 | 5.40 | 14.0 |
| 16.0 | | | | | | | | 2.10 | 2.70 | 3.85 | 4.15 | 2.45 | 3.75 | 4.20 | 16.0 |
| 18.0 | | | | | | | | | | | | 1.60 | 2.90 | 3.35 | 18.0 |
| 20.0 | | | | | | | | | | | | 0.95 | 2.25 | 2.70 | 20.0 |
| 21.0 | | | | | | | | | | | | 0.70 | 2.00 | 2.45 | 21.0 |
| 22.0 | | | | | | | | | | | | | | | 22.0 |
| 24.0 | | | | | | | | | | | | | | | 24.0 |
| 26.0 | | | | | | | | | | | | | | | 26.0 |
| 28.0 | | | | | | | | | | | | | | | 28.0 |
| 30.0 | | | | | | | | | | | | | | | 30.0 |
| 31.0 | | | | | | | | | | | | | | | 31.0 |
| 32.0 | | | | | | | | | | | | | | | 32.0 |
| 34.0 | | | | | | | | | | | | | | | 34.0 |
| 35.0 | | | | | | | | | | | | | | | 35.0 |
| 36.0 | | | | | | | | | | | | | | | 36.0 |
| 38.0 | | | | | | | | | | | | | | | 38.0 |
| 40.0 | | | | | | | | | | | | | | | 40.0 |
| 42.0 | | | | | | | | | | | | | | | 42.0 |
| 44.0 | | | | | | | | | | | | | | | 44.0 |
| 1 | 0 | 46 | 0 | 92 | 46 | 0 | 0 | 92 | 46 | 0 | 0 | 92 | 0 | 0 | 1 |
| 2 | 0 | 0 | 0 | 0 | 46 | 0 | 0 | 46 | 46 | 0 | 0 | 46 | 46 | 0 | 2 |
| 3 | 0 | 0 | 0 | 0 | 0 | 0 | 0 | 0 | 46 | 46 | 0 | 46 | 46 | 0 | 3 |
| 4 | 0 | 0 | 0 | 0 | 0 | 46 | 0 | 0 | 0 | 46 | 46 | 0 | 46 | 92 | 4 |
| 5 | 0 | 0 | 46 | 0 | 0 | 46 | 92 | 0 | 0 | 46 | 92 | 0 | 46 | 92 | 5 |
| ID | 1 | 23 | 2 | 24 | 25 | 12 | 3 | 26 | 27 | 13 | 4 | 28 | 14 | 5 | ID |
| t | 20.7 | 24.3 | 19.9 | 20.5 | 24.0 | 19.1 | 17.8 | 20.6 | 23.6 | 18.0 | 18.8 | 20.5 | 24.2 | 17.3 | t |
| [DEG] | 0～84 | 0～84 | 0～84 | 0～84 | 0～84 | 0～84 | 0～84 | 0～84 | 0～84 | 0～84 | 0～84 | 0～84 | 0～84 | 0～84 | [DEG] |
| | 20 | 9 | 5 | 9 | 8 | 5 | 5 | 8 | 8 | 5 | 5 | 7 | 5 | 4 | |
| | 重荷重装置 | 50t | 35t | 50t | 50t | 35t | 35t | 50t | 50t | 35t | 35t | 50t | 35t | 35t | |

| m | 27.7 | 27.7 | 27.7 | 31.2 | 31.2 | 31.2 | 34.7 | 34.7 | 34.7 | 38.2 | 38.2 | 41.7 | 41.7 | 45.2 | 48.0 | m |
|---|---|---|---|---|---|---|---|---|---|---|---|---|---|---|---|---|
| 1.6 | | | | | | | | | | | | | | | | 1.6 |
| 2.0 | | | | | | | | | | | | | | | | 2.0 |
| 2.5 | 25.00 | 25.00 | 18.40 | | | | | | | | | | | | | 2.5 |
| 3.0 | 25.00 | 25.00 | 17.60 | 20.00 | 20.00 | 16.70 | | | | | | | | | | 3.0 |
| 3.5 | 25.00 | 25.00 | 16.90 | 20.00 | 19.80 | 16.10 | 18.40 | 15.00 | 14.70 | | | | | | | 3.5 |
| 4.0 | 25.00 | 25.00 | 16.20 | 20.00 | 19.20 | 15.60 | 18.40 | 15.00 | 14.70 | 15.00 | 12.50 | | | | | 4.0 |
| 4.5 | 24.60 | 25.00 | 15.60 | 20.00 | 18.60 | 15.10 | 18.40 | 14.90 | 14.40 | 15.00 | 12.50 | | | | | 4.5 |
| 5.0 | 21.40 | 22.60 | 14.80 | 20.00 | 18.10 | 14.60 | 18.40 | 14.50 | 14.10 | 15.00 | 12.50 | 12.10 | 11.00 | | | 5.0 |
| 5.5 | 18.80 | 19.90 | 14.00 | 18.60 | 17.60 | 14.20 | 17.80 | 14.20 | 13.70 | 15.00 | 12.50 | 12.10 | 11.00 | 9.70 | 7.50 | 5.5 |
| 6.0 | 16.70 | 17.80 | 13.30 | 16.70 | 17.10 | 13.60 | 16.00 | 13.80 | 13.40 | 15.00 | 12.50 | 12.10 | 11.00 | 9.70 | 7.50 | 6.0 |
| 6.5 | 15.00 | 16.00 | 12.70 | 15.00 | 15.90 | 13.00 | 14.40 | 13.40 | 13.00 | 14.10 | 12.50 | 12.10 | 11.00 | 9.70 | 7.50 | 6.5 |
| 7.0 | 13.50 | 14.50 | 12.10 | 13.60 | 14.40 | 12.30 | 13.10 | 13.00 | 12.70 | 12.80 | 12.20 | 12.10 | 11.00 | 9.70 | 7.50 | 7.0 |
| 8.0 | 11.10 | 12.00 | 11.10 | 11.30 | 12.10 | 11.30 | 10.90 | 12.00 | 11.90 | 10.70 | 11.70 | 10.60 | 11.00 | 9.70 | 7.50 | 8.0 |
| 9.0 | 9.30 | 10.20 | 10.30 | 9.50 | 10.30 | 10.30 | 9.20 | 10.20 | 10.60 | 9.10 | 10.10 | 9.05 | 9.65 | 9.10 | 7.50 | 9.0 |
| 10.0 | 7.85 | 8.65 | 9.55 | 8.10 | 8.90 | 9.50 | 7.85 | 8.90 | 9.20 | 7.80 | 8.75 | 7.80 | 8.40 | 7.90 | 7.50 | 10.0 |
| 11.0 | 6.60 | 7.30 | 8.25 | 6.95 | 7.65 | 8.15 | 6.75 | 7.75 | 8.10 | 6.75 | 7.65 | 6.75 | 7.35 | 6.85 | 6.75 | 11.0 |
| 12.0 | 5.55 | 6.25 | 7.15 | 6.00 | 6.60 | 7.05 | 5.85 | 6.80 | 7.05 | 5.85 | 6.75 | 5.90 | 6.45 | 6.00 | 5.90 | 12.0 |
| 14.0 | 4.00 | 4.65 | 5.50 | 4.40 | 5.00 | 5.40 | 4.40 | 5.20 | 5.45 | 4.45 | 5.25 | 4.55 | 5.05 | 4.70 | 4.60 | 14.0 |
| 16.0 | 2.85 | 3.50 | 4.35 | 3.25 | 3.85 | 4.25 | 3.25 | 4.00 | 4.25 | 3.35 | 4.10 | 3.50 | 4.00 | 3.65 | 3.60 | 16.0 |
| 18.0 | 2.00 | 2.65 | 3.50 | 2.45 | 3.00 | 3.40 | 2.40 | 3.15 | 3.40 | 2.55 | 3.25 | 2.70 | 3.10 | 2.85 | 2.80 | 18.0 |
| 20.0 | 1.35 | 2.00 | 2.80 | 1.75 | 2.30 | 2.70 | 1.75 | 2.50 | 2.70 | 1.85 | 2.55 | 2.05 | 2.45 | 2.20 | 2.20 | 20.0 |
| 21.0 | 1.05 | 1.75 | 2.55 | 1.45 | 2.05 | 2.45 | 1.45 | 2.20 | 2.45 | 1.60 | 2.30 | 1.75 | 2.15 | 1.95 | 1.90 | 21.0 |
| 22.0 | 0.80 | 1.50 | 2.30 | 1.20 | 1.80 | 2.20 | 1.20 | 1.95 | 2.20 | 1.30 | 2.05 | 1.50 | 1.90 | 1.70 | 1.65 | 22.0 |
| 24.0 | | 1.05 | 1.90 | 0.75 | 1.35 | 1.75 | 0.75 | 1.50 | 1.75 | 0.85 | 1.60 | 1.00 | 1.45 | 1.25 | 1.25 | 24.0 |
| 26.0 | | | | | 0.95 | 1.40 | | 1.15 | 1.35 | | 1.20 | | 1.05 | 0.85 | | 26.0 |
| 28.0 | | | | | 0.70 | 1.10 | | 0.80 | 1.05 | | 0.85 | | 0.75 | | | 28.0 |
| 30.0 | | | | | | | | 0.55 | 0.80 | | 0.60 | | | | | 30.0 |
| 31.0 | | | | | | | | | 0.65 | | | | | | | 31.0 |
| 32.0 | | | | | | | | | | | | | | | | 32.0 |
| 34.0 | | | | | | | | | | | | | | | | 34.0 |
| 35.0 | | | | | | | | | | | | | | | | 35.0 |
| 36.0 | | | | | | | | | | | | | | | | 36.0 |
| 38.0 | | | | | | | | | | | | | | | | 38.0 |
| 40.0 | | | | | | | | | | | | | | | | 40.0 |
| 42.0 | | | | | | | | | | | | | | | | 42.0 |
| 44.0 | | | | | | | | | | | | | | | | 44.0 |
| 1 | 92 | 46 | 0 | 92 | 46 | 0 | 92 | 46 | 0 | 92 | 0 | 92 | 46 | 92 | 100 | 1 |
| 2 | 46 | 46 | 0 | 46 | 46 | 0 | 92 | 46 | 46 | 92 | 92 | 92 | 92 | 92 | 100 | 2 |
| 3 | 46 | 46 | 46 | 46 | 46 | 92 | 46 | 46 | 92 | 92 | 92 | 92 | 92 | 92 | 100 | 3 |
| 4 | 46 | 46 | 92 | 46 | 46 | 92 | 46 | 92 | 92 | 46 | 92 | 92 | 92 | 92 | 100 | 4 |
| 5 | 0 | 46 | 92 | 46 | 92 | 92 | 46 | 92 | 92 | 46 | 92 | 46 | 92 | 92 | 100 | 5 |
| ID | 29 | 15 | 6 | 16 | 17 | 7 | 19 | 18 | 8 | 20 | 9 | 21 | 10 | 11 | 22 | ID |
| t | 20.1 | 22.2 | 17.0 | 20.0 | 20.0 | 16.7 | 18.4 | 15.0 | 14.7 | 15.0 | 12.5 | 12.1 | 11.0 | 9.7 | 7.5 | t |
| [DEG] | 17～84 | 0～84 | 0～84 | 28～84 | 0～84 | 0～84 | 34～84 | 0～84 | 0～84 | 40～84 | 30～84 | 44～84 | 37～84 | 47～84 | 51～84 | [DEG] |
| | 5 | 5 | 4 | 4 | 4 | 4 | 4 | 3 | 3 | 3 | 3 | 3 | 3 | 3 | 3 | |
| | 35t | 35t | 35t | 35t | 35t | 35t | 35t | 35t | 35t | 35t | 35t | 35t | 35t | 35t | 35t | |

# ブーム

| MB | | 0.0 t |
|---|---|---|
| スマートチャート1（前方） | SMART CHART | JPN |

| m | 10.2 |
|---|---|
| 1.6 | 100.00 |
| 2.0 | 84.00 |
| 2.5 | 73.10 |
| 3.0 | 65.50 |
| 3.5 | 59.10 |
| 4.0 | 53.70 |
| 4.5 | 49.00 |
| 5.0 | 44.70 |
| 5.5 | 40.30 |
| 6.0 | 36.60 |
| 6.5 | 33.50 |
| 7.0 | 30.80 |
| 8.0 | |
| 9.0 | |
| 10.0 | |
| 11.0 | |
| 12.0 | |
| 14.0 | |
| 16.0 | |
| 18.0 | |
| 20.0 | |
| 21.0 | |
| 22.0 | |
| 24.0 | |
| 26.0 | |
| 28.0 | |
| 30.0 | |
| 31.0 | |
| 32.0 | |
| 34.0 | |
| 35.0 | |
| 36.0 | |
| 38.0 | |
| 40.0 | |
| 42.0 | |
| 44.0 | |
| 1 | 0 |
| 2 | 0 |
| 3 | 0 |
| 4 | 0 |
| 5 | 0 |
| ID | 1 |
| t | 20.7 |
| [DEG] | 0～84 |
| | 20 |
| | 重荷重装置 |

| MB | | 0.0 t | スマートチャート1 | | JPN |
|---|---|---|---|---|---|

| m | 10.2 | 13.7 | 13.7 | 17.2 | 17.2 | 17.2 | 17.2 | 20.7 | 20.7 | 20.7 | 20.7 | 24.2 | 24.2 | 24.2 | m |
|---|---|---|---|---|---|---|---|---|---|---|---|---|---|---|---|
| 1.6 | 75.00 | | | | | | | | | | | | | | 1.6 |
| 2.0 | 75.00 | 45.00 | 25.00 | 45.00 | 40.00 | 25.00 | 21.60 | 40.00 | 40.00 | 25.00 | 23.00 | 35.00 | 25.00 | 19.90 | 2.0 |
| 2.5 | 73.10 | 45.00 | 25.00 | 45.00 | 40.00 | 25.00 | 19.90 | 40.00 | 40.00 | 25.00 | 21.40 | 35.00 | 25.00 | 18.90 | 2.5 |
| 3.0 | 65.50 | 45.00 | 25.00 | 45.00 | 40.00 | 25.00 | 18.50 | 40.00 | 40.00 | 25.00 | 20.10 | 35.00 | 25.00 | 17.90 | 3.0 |
| 3.5 | 59.10 | 45.00 | 24.10 | 45.00 | 40.00 | 25.00 | 17.30 | 40.00 | 40.00 | 25.00 | 18.90 | 35.00 | 25.00 | 16.80 | 3.5 |
| 4.0 | 53.70 | 45.00 | 22.80 | 42.90 | 40.00 | 25.00 | 16.20 | 38.60 | 40.00 | 25.00 | 17.70 | 33.80 | 25.00 | 15.70 | 4.0 |
| 4.5 | 49.00 | 45.00 | 21.70 | 40.20 | 40.00 | 23.80 | 15.20 | 36.30 | 40.00 | 25.00 | 16.60 | 32.40 | 25.00 | 14.70 | 4.5 |
| 5.0 | 44.70 | 44.50 | 20.60 | 37.70 | 40.00 | 22.50 | 14.40 | 34.30 | 39.50 | 24.70 | 15.70 | 30.60 | 25.00 | 13.90 | 5.0 |
| 5.5 | 40.30 | 40.10 | 19.70 | 35.50 | 40.00 | 21.30 | 13.60 | 32.50 | 37.60 | 23.50 | 14.80 | 28.90 | 24.90 | 13.10 | 5.5 |
| 6.0 | 36.60 | 36.40 | 18.90 | 33.60 | 36.70 | 20.30 | 12.90 | 30.90 | 35.90 | 22.40 | 14.10 | 27.40 | 23.90 | 12.40 | 6.0 |
| 6.5 | 33.50 | 33.30 | 18.10 | 31.80 | 33.60 | 19.30 | 12.30 | 29.40 | 33.90 | 21.50 | 13.40 | 26.10 | 23.00 | 11.80 | 6.5 |
| 7.0 | 30.80 | 30.60 | 17.40 | 30.20 | 30.90 | 18.50 | 11.70 | 28.00 | 31.20 | 20.60 | 12.70 | 24.90 | 22.10 | 11.20 | 7.0 |
| 8.0 | | 26.20 | 16.20 | 26.00 | 26.50 | 16.90 | 10.70 | 25.40 | 26.80 | 19.00 | 11.60 | 22.70 | 20.50 | 10.20 | 8.0 |
| 9.0 | | 22.80 | 15.20 | 22.70 | 23.10 | 15.60 | 9.95 | 22.90 | 23.40 | 17.50 | 10.70 | 20.90 | 19.20 | 9.40 | 9.0 |
| 10.0 | | 20.10 | 14.50 | 19.90 | 20.40 | 14.60 | 9.20 | 20.20 | 20.70 | 16.30 | 9.95 | 19.30 | 18.00 | 8.65 | 10.0 |
| 11.0 | | | | 16.70 | 17.40 | 13.60 | 8.60 | 17.10 | 17.90 | 15.20 | 9.25 | 17.60 | 16.80 | 8.05 | 11.0 |
| 12.0 | | | | 14.10 | 14.80 | 12.80 | 8.10 | 14.50 | 15.30 | 14.20 | 8.65 | 15.00 | 15.80 | 7.50 | 12.0 |
| 14.0 | | | | 10.50 | 11.20 | 11.60 | 7.30 | 10.80 | 11.60 | 12.70 | 7.70 | 11.30 | 13.10 | 6.60 | 14.0 |
| 16.0 | | | | | | | | 8.35 | 9.10 | 10.60 | 6.90 | 8.75 | 10.50 | 5.90 | 16.0 |
| 18.0 | | | | | | | | | | | | 6.90 | 8.60 | 5.30 | 18.0 |
| 20.0 | | | | | | | | | | | | 5.50 | 7.15 | 4.85 | 20.0 |
| 21.0 | | | | | | | | | | | | 4.95 | 6.55 | 4.65 | 21.0 |
| 22.0 | | | | | | | | | | | | | | | 22.0 |
| 24.0 | | | | | | | | | | | | | | | 24.0 |
| 26.0 | | | | | | | | | | | | | | | 26.0 |
| 28.0 | | | | | | | | | | | | | | | 28.0 |
| 30.0 | | | | | | | | | | | | | | | 30.0 |
| 31.0 | | | | | | | | | | | | | | | 31.0 |
| 32.0 | | | | | | | | | | | | | | | 32.0 |
| 34.0 | | | | | | | | | | | | | | | 34.0 |
| 35.0 | | | | | | | | | | | | | | | 35.0 |
| 36.0 | | | | | | | | | | | | | | | 36.0 |
| 38.0 | | | | | | | | | | | | | | | 38.0 |
| 40.0 | | | | | | | | | | | | | | | 40.0 |
| 42.0 | | | | | | | | | | | | | | | 42.0 |
| 44.0 | | | | | | | | | | | | | | | 44.0 |
| 1 | 0 | 46 | 0 | 92 | 46 | 0 | 0 | 92 | 46 | 0 | 0 | 92 | 0 | 0 | 1 |
| 2 | 0 | 0 | 0 | 0 | 46 | 0 | 0 | 46 | 46 | 0 | 0 | 46 | 46 | 0 | 2 |
| 3 | 0 | 0 | 0 | 0 | 0 | 0 | 0 | 0 | 46 | 46 | 0 | 46 | 46 | 0 | 3 |
| 4 | 0 | 0 | 0 | 0 | 0 | 46 | 0 | 0 | 0 | 46 | 46 | 0 | 46 | 92 | 4 |
| 5 | 0 | 0 | 46 | 0 | 0 | 46 | 92 | 0 | 0 | 46 | 92 | 0 | 46 | 92 | 5 |
| ID | 1 | 23 | 2 | 24 | 25 | 12 | 3 | 26 | 27 | 13 | 4 | 28 | 14 | 5 | ID |
| t | 20.7 | 24.3 | 19.9 | 20.5 | 24.0 | 19.1 | 17.8 | 20.6 | 23.6 | 18.0 | 18.8 | 20.5 | 24.2 | 17.3 | t |
| [DEG] | 0～84 | 0～84 | 0～84 | 0～84 | 0～84 | 0～84 | 0～84 | 0～84 | 0～84 | 0～84 | 0～84 | 0～84 | 0～84 | 0～84 | [DEG] |
| | 20 | 9 | 5 | 9 | 8 | 5 | 5 | 8 | 8 | 5 | 5 | 7 | 5 | 4 | |
| | 重荷重装置 | 50t | 35t | 50t | 50t | 35t | 35t | 50t | 50t | 35t | 35t | 50t | 35t | 35t | |

| m | 27.7 | 27.7 | 27.7 | 31.2 | 31.2 | 31.2 | 34.7 | 34.7 | 34.7 | 38.2 | 38.2 | 41.7 | 41.7 | 45.2 | 48.0 | m |
|---|---|---|---|---|---|---|---|---|---|---|---|---|---|---|---|---|
| 1.6 | | | | | | | | | | | | | | | | 1.6 |
| 2.0 | | | | | | | | | | | | | | | | 2.0 |
| 2.5 | 25.00 | 25.00 | 18.40 | | | | | | | | | | | | | 2.5 |
| 3.0 | 25.00 | 25.00 | 17.60 | 20.00 | 20.00 | 16.70 | | | | | | | | | | 3.0 |
| 3.5 | 25.00 | 25.00 | 16.90 | 20.00 | 19.80 | 16.10 | 18.40 | 15.00 | 14.70 | | | | | | | 3.5 |
| 4.0 | 25.00 | 25.00 | 16.20 | 20.00 | 19.20 | 15.60 | 18.40 | 15.00 | 14.70 | 15.00 | 12.50 | | | | | 4.0 |
| 4.5 | 25.00 | 25.00 | 15.60 | 20.00 | 18.60 | 15.10 | 18.40 | 14.90 | 14.40 | 15.00 | 12.50 | | | | | 4.5 |
| 5.0 | 25.00 | 25.00 | 14.80 | 20.00 | 18.10 | 14.60 | 18.40 | 14.50 | 14.10 | 15.00 | 12.50 | 12.10 | 11.00 | | | 5.0 |
| 5.5 | 25.00 | 25.00 | 14.00 | 20.00 | 17.60 | 14.20 | 18.40 | 14.20 | 13.70 | 15.00 | 12.50 | 12.10 | 11.00 | 9.70 | 7.50 | 5.5 |
| 6.0 | 24.90 | 24.90 | 13.30 | 20.00 | 17.10 | 13.60 | 18.40 | 13.80 | 13.40 | 15.00 | 12.50 | 12.10 | 11.00 | 9.70 | 7.50 | 6.0 |
| 6.5 | 24.00 | 24.10 | 12.70 | 20.00 | 16.40 | 13.00 | 18.40 | 13.40 | 13.00 | 15.00 | 12.50 | 12.10 | 11.00 | 9.70 | 7.50 | 6.5 |
| 7.0 | 22.90 | 23.20 | 12.10 | 20.00 | 15.80 | 12.30 | 18.10 | 13.00 | 12.70 | 15.00 | 12.20 | 12.10 | 11.00 | 9.70 | 7.50 | 7.0 |
| 8.0 | 21.00 | 21.70 | 11.10 | 19.20 | 14.70 | 11.30 | 16.80 | 12.40 | 11.90 | 14.90 | 11.70 | 12.10 | 11.00 | 9.70 | 7.50 | 8.0 |
| 9.0 | 19.30 | 20.40 | 10.30 | 18.00 | 13.70 | 10.30 | 15.60 | 11.60 | 11.00 | 14.10 | 11.20 | 12.10 | 10.90 | 9.70 | 7.50 | 9.0 |
| 10.0 | 17.80 | 19.20 | 9.55 | 16.80 | 12.90 | 9.55 | 14.50 | 10.90 | 10.20 | 13.20 | 10.60 | 11.90 | 10.60 | 9.70 | 7.50 | 10.0 |
| 11.0 | 16.60 | 18.10 | 8.90 | 15.60 | 12.10 | 8.85 | 13.60 | 10.20 | 9.50 | 12.40 | 9.95 | 11.30 | 10.20 | 9.70 | 7.50 | 11.0 |
| 12.0 | 15.50 | 16.60 | 8.35 | 14.60 | 11.40 | 8.25 | 12.80 | 9.65 | 8.90 | 11.60 | 9.35 | 10.70 | 9.65 | 9.60 | 7.50 | 12.0 |
| 14.0 | 11.90 | 12.80 | 7.40 | 12.50 | 10.30 | 7.25 | 11.40 | 8.65 | 7.90 | 10.30 | 8.25 | 9.55 | 8.65 | 8.85 | 7.15 | 14.0 |
| 16.0 | 9.30 | 10.20 | 6.60 | 9.85 | 9.40 | 6.45 | 9.85 | 7.80 | 7.05 | 9.30 | 7.35 | 8.60 | 7.75 | 8.10 | 6.50 | 16.0 |
| 18.0 | 7.40 | 8.25 | 6.00 | 7.95 | 8.60 | 5.80 | 7.95 | 7.15 | 6.35 | 8.10 | 6.55 | 7.80 | 7.00 | 7.35 | 5.95 | 18.0 |
| 20.0 | 6.00 | 6.80 | 5.50 | 6.50 | 7.20 | 5.25 | 6.45 | 6.55 | 5.80 | 6.65 | 5.95 | 6.85 | 6.35 | 6.70 | 5.30 | 20.0 |
| 21.0 | 5.40 | 6.20 | 5.25 | 5.90 | 6.60 | 5.00 | 5.85 | 6.30 | 5.55 | 6.05 | 5.65 | 6.25 | 6.05 | 6.40 | 5.00 | 21.0 |
| 22.0 | 4.85 | 5.70 | 5.05 | 5.35 | 6.05 | 4.75 | 5.30 | 6.05 | 5.30 | 5.50 | 5.40 | 5.70 | 5.80 | 5.95 | 4.75 | 22.0 |
| 24.0 | 4.00 | 4.80 | 4.70 | 4.40 | 5.15 | 4.40 | 4.40 | 5.35 | 4.90 | 4.55 | 4.95 | 4.75 | 5.25 | 5.00 | 4.30 | 24.0 |
| 26.0 | | | | 3.70 | 4.40 | 4.05 | 3.65 | 4.55 | 4.50 | 3.80 | 4.55 | 4.00 | 4.50 | 4.20 | 3.85 | 26.0 |
| 28.0 | | | | 3.10 | 3.75 | 3.75 | 3.00 | 3.90 | 4.20 | 3.15 | 4.00 | 3.35 | 3.85 | 3.60 | 3.50 | 28.0 |
| 30.0 | | | | | | | 2.50 | 3.40 | 3.65 | 2.60 | 3.45 | 2.80 | 3.30 | 3.05 | 3.05 | 30.0 |
| 31.0 | | | | | | | 2.25 | 3.15 | 3.45 | 2.35 | 3.20 | 2.55 | 3.05 | 2.80 | 2.80 | 31.0 |
| 32.0 | | | | | | | | | | 2.15 | 3.00 | 2.35 | 2.85 | 2.55 | 2.55 | 32.0 |
| 34.0 | | | | | | | | | | 1.75 | 2.60 | 1.95 | 2.40 | 2.15 | 2.15 | 34.0 |
| 35.0 | | | | | | | | | | 1.60 | 2.45 | 1.75 | 2.25 | 1.95 | 1.95 | 35.0 |
| 36.0 | | | | | | | | | | | | 1.60 | 2.05 | 1.80 | 1.80 | 36.0 |
| 38.0 | | | | | | | | | | | | 1.30 | 1.80 | 1.50 | 1.50 | 38.0 |
| 40.0 | | | | | | | | | | | | | | 1.20 | 1.20 | 40.0 |
| 42.0 | | | | | | | | | | | | | | 1.00 | 0.95 | 42.0 |
| 44.0 | | | | | | | | | | | | | | | 0.75 | 44.0 |
| 1 | 92 | 46 | 0 | 92 | 46 | 0 | 92 | 46 | 0 | 92 | 0 | 92 | 46 | 92 | 100 | 1 |
| 2 | 46 | 46 | 0 | 46 | 46 | 0 | 92 | 46 | 46 | 92 | 92 | 92 | 92 | 92 | 100 | 2 |
| 3 | 46 | 46 | 46 | 46 | 46 | 92 | 46 | 46 | 92 | 92 | 92 | 92 | 92 | 92 | 100 | 3 |
| 4 | 46 | 46 | 92 | 46 | 46 | 92 | 46 | 92 | 92 | 46 | 92 | 92 | 92 | 92 | 100 | 4 |
| 5 | 0 | 46 | 92 | 46 | 92 | 92 | 46 | 92 | 92 | 46 | 92 | 46 | 92 | 92 | 100 | 5 |
| ID | 29 | 15 | 6 | 16 | 17 | 7 | 19 | 18 | 8 | 20 | 9 | 21 | 10 | 11 | 22 | ID |
| t | 20.1 | 22.2 | 17.0 | 20.0 | 20.0 | 16.7 | 18.4 | 15.0 | 14.7 | 15.0 | 12.5 | 12.1 | 11.0 | 9.7 | 7.5 | t |
| [DEG] | 0～84 | 0～84 | 0～84 | 0～84 | 0～84 | 0～84 | 0～84 | 0～84 | 0～84 | 0～84 | 0～84 | 0～84 | 0～84 | 0～84 | 0～84 | [DEG] |
| | 5 | 5 | 4 | 4 | 4 | 4 | 4 | 3 | 3 | 3 | 3 | 3 | 3 | 3 | 3 | |
| | 35t | 35t | 35t | 35t | 35t | 35t | 35t | 35t | 35t | 35t | 35t | 35t | 35t | 35t | 35t | |

| MB | | 0.0 t | スマートチャート2 | JPN |
|---|---|---|---|---|

| m | 10.2 | 13.7 | 13.7 | 17.2 | 17.2 | 17.2 | 17.2 | 20.7 | 20.7 | 20.7 | 20.7 | 24.2 | 24.2 | 24.2 | m |
|---|---|---|---|---|---|---|---|---|---|---|---|---|---|---|---|
| 1.6 | 75.00 | | | | | | | | | | | | | | 1.6 |
| 2.0 | 75.00 | 45.00 | 25.00 | 45.00 | 40.00 | 25.00 | 21.60 | 40.00 | 40.00 | 25.00 | 23.00 | 35.00 | 25.00 | 19.90 | 2.0 |
| 2.5 | 69.90 | 45.00 | 25.00 | 45.00 | 40.00 | 25.00 | 19.90 | 40.00 | 40.00 | 25.00 | 21.40 | 35.00 | 25.00 | 18.90 | 2.5 |
| 3.0 | 62.50 | 45.00 | 25.00 | 45.00 | 40.00 | 25.00 | 18.50 | 40.00 | 40.00 | 25.00 | 20.10 | 35.00 | 25.00 | 17.90 | 3.0 |
| 3.5 | 56.30 | 45.00 | 24.10 | 45.00 | 40.00 | 25.00 | 17.30 | 40.00 | 40.00 | 25.00 | 18.90 | 35.00 | 25.00 | 16.80 | 3.5 |
| 4.0 | 51.00 | 45.00 | 22.80 | 42.90 | 40.00 | 25.00 | 16.20 | 38.60 | 40.00 | 25.00 | 17.70 | 33.80 | 25.00 | 15.70 | 4.0 |
| 4.5 | 46.50 | 45.00 | 21.70 | 40.20 | 40.00 | 23.80 | 15.20 | 36.30 | 40.00 | 25.00 | 16.60 | 32.40 | 25.00 | 14.70 | 4.5 |
| 5.0 | 42.60 | 42.50 | 20.60 | 37.70 | 40.00 | 22.50 | 14.40 | 34.30 | 39.50 | 24.70 | 15.70 | 30.60 | 25.00 | 13.90 | 5.0 |
| 5.5 | 39.20 | 39.00 | 19.70 | 35.50 | 39.30 | 21.30 | 13.60 | 32.50 | 37.60 | 23.50 | 14.80 | 28.90 | 24.90 | 13.10 | 5.5 |
| 6.0 | 36.20 | 36.10 | 18.90 | 33.60 | 36.30 | 20.30 | 12.90 | 30.90 | 35.90 | 22.40 | 14.10 | 27.40 | 23.90 | 12.40 | 6.0 |
| 6.5 | 33.50 | 33.30 | 18.10 | 31.80 | 33.60 | 19.30 | 12.30 | 29.40 | 33.90 | 21.50 | 13.40 | 26.10 | 23.00 | 11.80 | 6.5 |
| 7.0 | 30.80 | 30.60 | 17.40 | 30.20 | 30.90 | 18.50 | 11.70 | 28.00 | 31.20 | 20.60 | 12.70 | 24.90 | 22.10 | 11.20 | 7.0 |
| 8.0 | | 26.20 | 16.20 | 26.00 | 26.50 | 16.90 | 10.70 | 25.40 | 26.80 | 19.00 | 11.60 | 22.70 | 20.50 | 10.20 | 8.0 |
| 9.0 | | 22.80 | 15.20 | 22.50 | 23.10 | 15.60 | 9.95 | 22.90 | 23.40 | 17.50 | 10.70 | 20.90 | 19.20 | 9.40 | 9.0 |
| 10.0 | | 18.80 | 14.50 | 18.50 | 19.20 | 14.60 | 9.20 | 18.90 | 19.80 | 16.30 | 9.95 | 19.30 | 18.00 | 8.65 | 10.0 |
| 11.0 | | | | 15.40 | 16.10 | 13.60 | 8.60 | 15.80 | 16.70 | 15.20 | 9.25 | 16.30 | 16.80 | 8.05 | 11.0 |
| 12.0 | | | | 12.70 | 13.40 | 12.80 | 8.10 | 13.10 | 13.90 | 14.20 | 8.65 | 13.60 | 15.40 | 7.50 | 12.0 |
| 14.0 | | | | 9.10 | 9.70 | 11.50 | 7.30 | 9.40 | 10.10 | 11.60 | 7.70 | 9.80 | 11.50 | 6.60 | 14.0 |
| 16.0 | | | | | | | | 7.00 | 7.70 | 9.05 | 6.90 | 7.40 | 8.95 | 5.90 | 16.0 |
| 18.0 | | | | | | | | | | | | 5.70 | 7.15 | 5.30 | 18.0 |
| 20.0 | | | | | | | | | | | | 4.45 | 5.85 | 4.85 | 20.0 |
| 21.0 | | | | | | | | | | | | 3.95 | 5.35 | 4.65 | 21.0 |
| 22.0 | | | | | | | | | | | | | | | 22.0 |
| 24.0 | | | | | | | | | | | | | | | 24.0 |
| 26.0 | | | | | | | | | | | | | | | 26.0 |
| 28.0 | | | | | | | | | | | | | | | 28.0 |
| 30.0 | | | | | | | | | | | | | | | 30.0 |
| 31.0 | | | | | | | | | | | | | | | 31.0 |
| 32.0 | | | | | | | | | | | | | | | 32.0 |
| 34.0 | | | | | | | | | | | | | | | 34.0 |
| 35.0 | | | | | | | | | | | | | | | 35.0 |
| 36.0 | | | | | | | | | | | | | | | 36.0 |
| 38.0 | | | | | | | | | | | | | | | 38.0 |
| 40.0 | | | | | | | | | | | | | | | 40.0 |
| 42.0 | | | | | | | | | | | | | | | 42.0 |
| 44.0 | | | | | | | | | | | | | | | 44.0 |
| 1 | 0 | 46 | 0 | 92 | 46 | 0 | 0 | 92 | 46 | 0 | 0 | 92 | 0 | 0 | 1 |
| 2 | 0 | 0 | 0 | 0 | 46 | 0 | 0 | 46 | 46 | 0 | 0 | 46 | 46 | 0 | 2 |
| 3 | 0 | 0 | 0 | 0 | 0 | 0 | 0 | 0 | 46 | 46 | 0 | 46 | 46 | 0 | 3 |
| 4 | 0 | 0 | 0 | 0 | 0 | 46 | 0 | 0 | 0 | 46 | 46 | 0 | 46 | 92 | 4 |
| 5 | 0 | 0 | 46 | 0 | 0 | 46 | 92 | 0 | 0 | 46 | 92 | 0 | 46 | 92 | 5 |
| ID | 1 | 23 | 2 | 24 | 25 | 12 | 3 | 26 | 27 | 13 | 4 | 28 | 14 | 5 | ID |
| t | 20.7 | 24.3 | 19.9 | 20.5 | 24.0 | 19.1 | 17.8 | 20.6 | 23.6 | 18.0 | 18.8 | 20.5 | 24.2 | 17.3 | t |
| [DEG] | 0～84 | 0～84 | 0～84 | 0～84 | 0～84 | 0～84 | 0～84 | 0～84 | 0～84 | 0～84 | 0～84 | 0～84 | 0～84 | 0～84 | [DEG] |
| | 20 | 9 | 5 | 9 | 8 | 5 | 5 | 8 | 8 | 5 | 5 | 7 | 5 | 4 | |
| | 重荷重装置 | 50t | 35t | 50t | 50t | 35t | 35t | 50t | 50t | 35t | 35t | 50t | 35t | 35t | |

| m | 27.7 | 27.7 | 27.7 | 31.2 | 31.2 | 31.2 | 34.7 | 34.7 | 34.7 | 38.2 | 38.2 | 41.7 | 41.7 | 45.2 | 48.0 | m |
|---|---|---|---|---|---|---|---|---|---|---|---|---|---|---|---|---|
| 1.6 | | | | | | | | | | | | | | | | 1.6 |
| 2.0 | | | | | | | | | | | | | | | | 2.0 |
| 2.5 | 25.00 | 25.00 | 18.40 | | | | | | | | | | | | | 2.5 |
| 3.0 | 25.00 | 25.00 | 17.60 | 20.00 | 20.00 | 16.70 | | | | | | | | | | 3.0 |
| 3.5 | 25.00 | 25.00 | 16.90 | 20.00 | 19.80 | 16.10 | 18.40 | 15.00 | 14.70 | | | | | | | 3.5 |
| 4.0 | 25.00 | 25.00 | 16.20 | 20.00 | 19.20 | 15.60 | 18.40 | 15.00 | 14.70 | 15.00 | 12.50 | | | | | 4.0 |
| 4.5 | 25.00 | 25.00 | 15.60 | 20.00 | 18.60 | 15.10 | 18.40 | 14.90 | 14.40 | 15.00 | 12.50 | | | | | 4.5 |
| 5.0 | 25.00 | 25.00 | 14.80 | 20.00 | 18.10 | 14.60 | 18.40 | 14.50 | 14.10 | 15.00 | 12.50 | 12.10 | 11.00 | | | 5.0 |
| 5.5 | 25.00 | 25.00 | 14.00 | 20.00 | 17.60 | 14.20 | 18.40 | 14.20 | 13.70 | 15.00 | 12.50 | 12.10 | 11.00 | 9.70 | 7.50 | 5.5 |
| 6.0 | 24.90 | 24.90 | 13.30 | 20.00 | 17.10 | 13.60 | 18.40 | 13.80 | 13.40 | 15.00 | 12.50 | 12.10 | 11.00 | 9.70 | 7.50 | 6.0 |
| 6.5 | 24.00 | 24.10 | 12.70 | 20.00 | 16.40 | 13.00 | 18.40 | 13.40 | 13.00 | 15.00 | 12.50 | 12.10 | 11.00 | 9.70 | 7.50 | 6.5 |
| 7.0 | 22.90 | 23.20 | 12.10 | 20.00 | 15.80 | 12.30 | 18.10 | 13.00 | 12.70 | 15.00 | 12.20 | 12.10 | 11.00 | 9.70 | 7.50 | 7.0 |
| 8.0 | 21.00 | 21.70 | 11.10 | 19.20 | 14.70 | 11.30 | 16.80 | 12.40 | 11.90 | 14.90 | 11.70 | 12.10 | 11.00 | 9.70 | 7.50 | 8.0 |
| 9.0 | 19.30 | 20.40 | 10.30 | 18.00 | 13.70 | 10.30 | 15.60 | 11.60 | 11.00 | 14.10 | 11.20 | 12.10 | 10.90 | 9.70 | 7.50 | 9.0 |
| 10.0 | 17.80 | 19.20 | 9.55 | 16.80 | 12.90 | 9.55 | 14.50 | 10.90 | 10.20 | 13.20 | 10.60 | 11.90 | 10.60 | 9.70 | 7.50 | 10.0 |
| 11.0 | 16.60 | 18.00 | 8.90 | 15.60 | 12.10 | 8.85 | 13.60 | 10.20 | 9.50 | 12.40 | 9.95 | 11.30 | 10.20 | 9.70 | 7.50 | 11.0 |
| 12.0 | 14.20 | 15.10 | 8.35 | 14.60 | 11.40 | 8.25 | 12.80 | 9.65 | 8.90 | 11.60 | 9.35 | 10.70 | 9.65 | 9.60 | 7.50 | 12.0 |
| 14.0 | 10.30 | 11.20 | 7.40 | 10.90 | 10.30 | 7.25 | 10.80 | 8.65 | 7.90 | 10.30 | 8.25 | 9.55 | 8.65 | 8.85 | 7.15 | 14.0 |
| 16.0 | 7.85 | 8.65 | 6.60 | 8.35 | 9.05 | 6.45 | 8.35 | 7.80 | 7.05 | 8.50 | 7.35 | 8.60 | 7.75 | 8.10 | 6.50 | 16.0 |
| 18.0 | 6.15 | 6.90 | 6.00 | 6.60 | 7.25 | 5.80 | 6.60 | 7.15 | 6.35 | 6.75 | 6.55 | 6.95 | 7.00 | 7.15 | 5.95 | 18.0 |
| 20.0 | 4.85 | 5.60 | 5.50 | 5.30 | 5.95 | 5.25 | 5.30 | 6.10 | 5.80 | 5.45 | 5.95 | 5.60 | 6.10 | 5.85 | 5.30 | 20.0 |
| 21.0 | 4.35 | 5.05 | 5.25 | 4.75 | 5.40 | 5.00 | 4.75 | 5.60 | 5.55 | 4.90 | 5.65 | 5.05 | 5.55 | 5.30 | 5.00 | 21.0 |
| 22.0 | 3.90 | 4.60 | 5.05 | 4.30 | 4.90 | 4.75 | 4.30 | 5.10 | 5.30 | 4.40 | 5.20 | 4.60 | 5.05 | 4.80 | 4.75 | 22.0 |
| 24.0 | 3.15 | 3.80 | 4.70 | 3.50 | 4.10 | 4.40 | 3.50 | 4.30 | 4.55 | 3.60 | 4.35 | 3.80 | 4.25 | 4.00 | 4.00 | 24.0 |
| 26.0 | | | | 2.90 | 3.45 | 3.90 | 2.85 | 3.60 | 3.85 | 3.00 | 3.70 | 3.15 | 3.55 | 3.35 | 3.35 | 26.0 |
| 28.0 | | | | 2.40 | 2.95 | 3.40 | 2.35 | 3.10 | 3.35 | 2.45 | 3.15 | 2.60 | 3.05 | 2.80 | 2.80 | 28.0 |
| 30.0 | | | | | | | 1.90 | 2.65 | 2.90 | 2.00 | 2.70 | 2.15 | 2.55 | 2.35 | 2.35 | 30.0 |
| 31.0 | | | | | | | 1.70 | 2.45 | 2.70 | 1.80 | 2.50 | 1.95 | 2.35 | 2.15 | 2.15 | 31.0 |
| 32.0 | | | | | | | | | | 1.60 | 2.30 | 1.75 | 2.20 | 1.95 | 1.95 | 32.0 |
| 34.0 | | | | | | | | | | 1.25 | 2.00 | 1.40 | 1.85 | 1.60 | 1.60 | 34.0 |
| 35.0 | | | | | | | | | | 1.10 | 1.85 | 1.25 | 1.70 | 1.45 | 1.45 | 35.0 |
| 36.0 | | | | | | | | | | | | 1.10 | 1.55 | 1.30 | 1.30 | 36.0 |
| 38.0 | | | | | | | | | | | | 0.85 | 1.30 | 1.05 | 1.05 | 38.0 |
| 40.0 | | | | | | | | | | | | | | 0.80 | 0.80 | 40.0 |
| 42.0 | | | | | | | | | | | | | | 0.60 | | 42.0 |
| 44.0 | | | | | | | | | | | | | | | | 44.0 |
| 1 | 92 | 46 | 0 | 92 | 46 | 0 | 92 | 46 | 0 | 92 | 0 | 92 | 46 | 92 | 100 | 1 |
| 2 | 46 | 46 | 0 | 46 | 46 | 0 | 92 | 46 | 46 | 92 | 92 | 92 | 92 | 92 | 100 | 2 |
| 3 | 46 | 46 | 46 | 46 | 46 | 92 | 46 | 46 | 92 | 92 | 92 | 92 | 92 | 92 | 100 | 3 |
| 4 | 46 | 46 | 92 | 46 | 46 | 92 | 46 | 92 | 92 | 46 | 92 | 92 | 92 | 92 | 100 | 4 |
| 5 | 0 | 46 | 92 | 46 | 92 | 92 | 46 | 92 | 92 | 46 | 92 | 46 | 92 | 92 | 100 | 5 |
| ID | 29 | 15 | 6 | 16 | 17 | 7 | 19 | 18 | 8 | 20 | 9 | 21 | 10 | 11 | 22 | ID |
| t | 20.1 | 22.2 | 17.0 | 20.0 | 20.0 | 16.7 | 18.4 | 15.0 | 14.7 | 15.0 | 12.5 | 12.1 | 11.0 | 9.7 | 7.5 | t |
| [DEG] | 0～84 | 0～84 | 0～84 | 0～84 | 0～84 | 0～84 | 0～84 | 0～84 | 0～84 | 0～84 | 0～84 | 0～84 | 0～84 | 0～84 | 0～84 | [DEG] |
| | 5 | 5 | 4 | 4 | 4 | 4 | 4 | 3 | 3 | 3 | 3 | 3 | 3 | 3 | 3 | |
| | 35t | 35t | 35t | 35t | 35t | 35t | 35t | 35t | 35t | 35t | 35t | 35t | 35t | 35t | 35t | |

# ブーム

| MB | | 0.0 t | 7.8m | 360 ° | JPN |
|---|---|---|---|---|---|

| m | 10.2 | 13.7 | 13.7 | 17.2 | 17.2 | 17.2 | 17.2 | 20.7 | 20.7 | 20.7 | 20.7 | 24.2 | 24.2 | 24.2 | m |
|---|---|---|---|---|---|---|---|---|---|---|---|---|---|---|---|
| 1.6 | 75.00 | | | | | | | | | | | | | | 1.6 |
| 2.0 | 75.00 | 45.00 | 25.00 | 45.00 | 40.00 | 25.00 | 21.60 | 40.00 | 40.00 | 25.00 | 23.00 | 35.00 | 25.00 | 19.90 | 2.0 |
| 2.5 | 69.90 | 45.00 | 25.00 | 45.00 | 40.00 | 25.00 | 19.90 | 40.00 | 40.00 | 25.00 | 21.40 | 35.00 | 25.00 | 18.90 | 2.5 |
| 3.0 | 62.50 | 45.00 | 25.00 | 45.00 | 40.00 | 25.00 | 18.50 | 40.00 | 40.00 | 25.00 | 20.10 | 35.00 | 25.00 | 17.90 | 3.0 |
| 3.5 | 56.30 | 45.00 | 24.10 | 45.00 | 40.00 | 25.00 | 17.30 | 40.00 | 40.00 | 25.00 | 18.90 | 35.00 | 25.00 | 16.80 | 3.5 |
| 4.0 | 51.00 | 45.00 | 22.80 | 42.90 | 40.00 | 25.00 | 16.20 | 38.60 | 40.00 | 25.00 | 17.70 | 33.80 | 25.00 | 15.70 | 4.0 |
| 4.5 | 46.50 | 45.00 | 21.70 | 40.20 | 40.00 | 23.80 | 15.20 | 36.30 | 40.00 | 25.00 | 16.60 | 32.40 | 25.00 | 14.70 | 4.5 |
| 5.0 | 42.60 | 42.50 | 20.60 | 37.70 | 40.00 | 22.50 | 14.40 | 34.30 | 39.50 | 24.70 | 15.70 | 30.60 | 25.00 | 13.90 | 5.0 |
| 5.5 | 39.20 | 39.00 | 19.70 | 35.50 | 39.30 | 21.30 | 13.60 | 32.50 | 37.60 | 23.50 | 14.80 | 28.90 | 24.90 | 13.10 | 5.5 |
| 6.0 | 36.20 | 36.10 | 18.90 | 33.60 | 36.30 | 20.30 | 12.90 | 30.90 | 35.90 | 22.40 | 14.10 | 27.40 | 23.90 | 12.40 | 6.0 |
| 6.5 | 33.50 | 33.30 | 18.10 | 31.80 | 33.60 | 19.30 | 12.30 | 29.40 | 33.90 | 21.50 | 13.40 | 26.10 | 23.00 | 11.80 | 6.5 |
| 7.0 | 30.80 | 30.60 | 17.40 | 30.20 | 30.90 | 18.50 | 11.70 | 28.00 | 31.20 | 20.60 | 12.70 | 24.90 | 22.10 | 11.20 | 7.0 |
| 8.0 | | 24.60 | 16.20 | 24.30 | 25.00 | 16.90 | 10.70 | 24.70 | 25.60 | 19.00 | 11.60 | 22.70 | 20.50 | 10.20 | 8.0 |
| 9.0 | | 19.00 | 15.20 | 18.60 | 19.40 | 15.60 | 9.95 | 19.00 | 19.90 | 17.50 | 10.70 | 19.60 | 19.20 | 9.40 | 9.0 |
| 10.0 | | 15.10 | 14.50 | 14.80 | 15.50 | 14.60 | 9.20 | 15.20 | 16.00 | 16.30 | 9.95 | 15.70 | 17.60 | 8.65 | 10.0 |
| 11.0 | | | | 12.10 | 12.70 | 13.60 | 8.60 | 12.40 | 13.20 | 14.80 | 9.25 | 12.90 | 14.70 | 8.05 | 11.0 |
| 12.0 | | | | 10.10 | 10.70 | 12.50 | 8.10 | 10.40 | 11.10 | 12.60 | 8.65 | 10.80 | 12.50 | 7.50 | 12.0 |
| 14.0 | | | | 7.25 | 7.80 | 9.45 | 7.30 | 7.50 | 8.15 | 9.55 | 7.70 | 7.90 | 9.45 | 6.60 | 14.0 |
| 16.0 | | | | | | | | 5.55 | 6.20 | 7.50 | 6.90 | 5.95 | 7.40 | 5.90 | 16.0 |
| 18.0 | | | | | | | | | | | | 4.55 | 5.95 | 5.30 | 18.0 |
| 20.0 | | | | | | | | | | | | 3.50 | 4.85 | 4.85 | 20.0 |
| 21.0 | | | | | | | | | | | | 3.10 | 4.40 | 4.65 | 21.0 |
| 22.0 | | | | | | | | | | | | | | | 22.0 |
| 24.0 | | | | | | | | | | | | | | | 24.0 |
| 26.0 | | | | | | | | | | | | | | | 26.0 |
| 28.0 | | | | | | | | | | | | | | | 28.0 |
| 30.0 | | | | | | | | | | | | | | | 30.0 |
| 31.0 | | | | | | | | | | | | | | | 31.0 |
| 32.0 | | | | | | | | | | | | | | | 32.0 |
| 34.0 | | | | | | | | | | | | | | | 34.0 |
| 35.0 | | | | | | | | | | | | | | | 35.0 |
| 36.0 | | | | | | | | | | | | | | | 36.0 |
| 38.0 | | | | | | | | | | | | | | | 38.0 |
| 40.0 | | | | | | | | | | | | | | | 40.0 |
| 42.0 | | | | | | | | | | | | | | | 42.0 |
| 44.0 | | | | | | | | | | | | | | | 44.0 |
| 1 | 0 | 46 | 0 | 92 | 46 | 0 | 0 | 92 | 46 | 0 | 0 | 92 | 0 | 0 | 1 |
| 2 | 0 | 0 | 0 | 0 | 46 | 0 | 0 | 46 | 46 | 0 | 0 | 46 | 46 | 0 | 2 |
| 3 | 0 | 0 | 0 | 0 | 0 | 0 | 0 | 0 | 46 | 46 | 0 | 46 | 46 | 0 | 3 |
| 4 | 0 | 0 | 0 | 0 | 0 | 46 | 0 | 0 | 0 | 46 | 46 | 0 | 46 | 92 | 4 |
| 5 | 0 | 0 | 46 | 0 | 0 | 46 | 92 | 0 | 0 | 46 | 92 | 0 | 46 | 92 | 5 |
| ID | 1 | 23 | 2 | 24 | 25 | 12 | 3 | 26 | 27 | 13 | 4 | 28 | 14 | 5 | ID |
| t | 20.7 | 24.3 | 19.9 | 20.5 | 24.0 | 19.1 | 17.8 | 20.6 | 23.6 | 18.0 | 18.8 | 20.5 | 24.2 | 17.3 | t |
| [DEG] | 0～84 | 0～84 | 0～84 | 0～84 | 0～84 | 0～84 | 0～84 | 0～84 | 0～84 | 0～84 | 0～84 | 0～84 | 0～84 | 0～84 | [DEG] |
| | 20 | 9 | 5 | 9 | 8 | 5 | 5 | 8 | 8 | 5 | 5 | 7 | 5 | 4 | |
| | 重荷重装置 | 50t | 35t | 50t | 50t | 35t | 35t | 50t | 50t | 35t | 35t | 50t | 35t | 35t | |

| m | 27.7 | 27.7 | 27.7 | 31.2 | 31.2 | 31.2 | 34.7 | 34.7 | 34.7 | 38.2 | 38.2 | 41.7 | 41.7 | 45.2 | 48.0 | m |
|---|---|---|---|---|---|---|---|---|---|---|---|---|---|---|---|---|
| 1.6 | | | | | | | | | | | | | | | | 1.6 |
| 2.0 | | | | | | | | | | | | | | | | 2.0 |
| 2.5 | 25.00 | 25.00 | 18.40 | | | | | | | | | | | | | 2.5 |
| 3.0 | 25.00 | 25.00 | 17.60 | 20.00 | 20.00 | 16.70 | | | | | | | | | | 3.0 |
| 3.5 | 25.00 | 25.00 | 16.90 | 20.00 | 19.80 | 16.10 | 18.40 | 15.00 | 14.70 | | | | | | | 3.5 |
| 4.0 | 25.00 | 25.00 | 16.20 | 20.00 | 19.20 | 15.60 | 18.40 | 15.00 | 14.70 | 15.00 | 12.50 | | | | | 4.0 |
| 4.5 | 25.00 | 25.00 | 15.60 | 20.00 | 18.60 | 15.10 | 18.40 | 14.90 | 14.40 | 15.00 | 12.50 | | | | | 4.5 |
| 5.0 | 25.00 | 25.00 | 14.80 | 20.00 | 18.10 | 14.60 | 18.40 | 14.50 | 14.10 | 15.00 | 12.50 | 12.10 | 11.00 | | | 5.0 |
| 5.5 | 25.00 | 25.00 | 14.00 | 20.00 | 17.60 | 14.20 | 18.40 | 14.20 | 13.70 | 15.00 | 12.50 | 12.10 | 11.00 | 9.70 | 7.50 | 5.5 |
| 6.0 | 24.90 | 24.90 | 13.30 | 20.00 | 17.10 | 13.60 | 18.40 | 13.80 | 13.40 | 15.00 | 12.50 | 12.10 | 11.00 | 9.70 | 7.50 | 6.0 |
| 6.5 | 24.00 | 24.10 | 12.70 | 20.00 | 16.40 | 13.00 | 18.40 | 13.40 | 13.00 | 15.00 | 12.50 | 12.10 | 11.00 | 9.70 | 7.50 | 6.5 |
| 7.0 | 22.90 | 23.20 | 12.10 | 20.00 | 15.80 | 12.30 | 18.10 | 13.00 | 12.70 | 15.00 | 12.20 | 12.10 | 11.00 | 9.70 | 7.50 | 7.0 |
| 8.0 | 21.00 | 21.70 | 11.10 | 19.20 | 14.70 | 11.30 | 16.80 | 12.40 | 11.90 | 14.90 | 11.70 | 12.10 | 11.00 | 9.70 | 7.50 | 8.0 |
| 9.0 | 19.30 | 20.40 | 10.30 | 18.00 | 13.70 | 10.30 | 15.60 | 11.60 | 11.00 | 14.10 | 11.20 | 12.10 | 10.90 | 9.70 | 7.50 | 9.0 |
| 10.0 | 16.30 | 17.30 | 9.55 | 16.80 | 12.90 | 9.55 | 14.50 | 10.90 | 10.20 | 13.20 | 10.60 | 11.90 | 10.60 | 9.70 | 7.50 | 10.0 |
| 11.0 | 13.50 | 14.40 | 8.90 | 14.10 | 12.10 | 8.85 | 13.60 | 10.20 | 9.50 | 12.40 | 9.95 | 11.30 | 10.20 | 9.70 | 7.50 | 11.0 |
| 12.0 | 11.40 | 12.20 | 8.35 | 11.90 | 11.40 | 8.25 | 11.90 | 9.65 | 8.90 | 11.60 | 9.35 | 10.70 | 9.65 | 9.60 | 7.50 | 12.0 |
| 14.0 | 8.40 | 9.15 | 7.40 | 8.90 | 9.55 | 7.25 | 8.85 | 8.65 | 7.90 | 9.05 | 8.25 | 9.25 | 8.65 | 8.85 | 7.15 | 14.0 |
| 16.0 | 6.40 | 7.10 | 6.60 | 6.85 | 7.50 | 6.45 | 6.85 | 7.70 | 7.05 | 7.00 | 7.35 | 7.20 | 7.65 | 7.40 | 6.50 | 16.0 |
| 18.0 | 4.95 | 5.65 | 6.00 | 5.40 | 6.00 | 5.80 | 5.40 | 6.20 | 6.35 | 5.50 | 6.30 | 5.70 | 6.15 | 5.95 | 5.95 | 18.0 |
| 20.0 | 3.90 | 4.55 | 5.45 | 4.30 | 4.90 | 5.25 | 4.30 | 5.10 | 5.35 | 4.40 | 5.15 | 4.60 | 5.05 | 4.80 | 4.80 | 20.0 |
| 21.0 | 3.45 | 4.10 | 5.00 | 3.85 | 4.45 | 4.90 | 3.85 | 4.65 | 4.90 | 3.95 | 4.70 | 4.15 | 4.60 | 4.35 | 4.35 | 21.0 |
| 22.0 | 3.05 | 3.75 | 4.60 | 3.45 | 4.05 | 4.45 | 3.45 | 4.20 | 4.45 | 3.55 | 4.30 | 3.75 | 4.15 | 3.95 | 3.95 | 22.0 |
| 24.0 | 2.40 | 3.05 | 3.90 | 2.80 | 3.35 | 3.75 | 2.75 | 3.50 | 3.75 | 2.90 | 3.60 | 3.05 | 3.45 | 3.25 | 3.25 | 24.0 |
| 26.0 | | | | 2.25 | 2.80 | 3.20 | 2.20 | 2.95 | 3.20 | 2.35 | 3.00 | 2.50 | 2.90 | 2.70 | 2.70 | 26.0 |
| 28.0 | | | | 1.80 | 2.35 | 2.75 | 1.75 | 2.50 | 2.70 | 1.85 | 2.55 | 2.00 | 2.45 | 2.20 | 2.20 | 28.0 |
| 30.0 | | | | | | | 1.35 | 2.10 | 2.35 | 1.45 | 2.15 | 1.60 | 2.05 | 1.80 | 1.80 | 30.0 |
| 31.0 | | | | | | | 1.15 | 1.95 | 2.15 | 1.25 | 2.00 | 1.40 | 1.85 | 1.65 | 1.65 | 31.0 |
| 32.0 | | | | | | | | | | 1.10 | 1.80 | 1.25 | 1.70 | 1.45 | 1.45 | 32.0 |
| 34.0 | | | | | | | | | | 0.80 | 1.55 | 0.95 | 1.40 | 1.15 | 1.15 | 34.0 |
| 35.0 | | | | | | | | | | 0.65 | 1.40 | 0.80 | 1.25 | 1.00 | 1.00 | 35.0 |
| 36.0 | | | | | | | | | | | | 0.70 | 1.10 | 0.85 | 0.85 | 36.0 |
| 38.0 | | | | | | | | | | | | | 0.90 | 0.65 | 0.65 | 38.0 |
| 40.0 | | | | | | | | | | | | | | | | 40.0 |
| 42.0 | | | | | | | | | | | | | | | | 42.0 |
| 44.0 | | | | | | | | | | | | | | | | 44.0 |
| 1 | 92 | 46 | 0 | 92 | 46 | 0 | 92 | 46 | 0 | 92 | 0 | 92 | 46 | 92 | 100 | 1 |
| 2 | 46 | 46 | 0 | 46 | 46 | 0 | 92 | 46 | 46 | 92 | 92 | 92 | 92 | 92 | 100 | 2 |
| 3 | 46 | 46 | 46 | 46 | 46 | 92 | 46 | 46 | 92 | 92 | 92 | 92 | 92 | 92 | 100 | 3 |
| 4 | 46 | 46 | 92 | 46 | 46 | 92 | 46 | 92 | 92 | 46 | 92 | 92 | 92 | 92 | 100 | 4 |
| 5 | 0 | 46 | 92 | 46 | 92 | 92 | 46 | 92 | 92 | 46 | 92 | 46 | 92 | 92 | 100 | 5 |
| ID | 29 | 15 | 6 | 16 | 17 | 7 | 19 | 18 | 8 | 20 | 9 | 21 | 10 | 11 | 22 | ID |
| t | 20.1 | 22.2 | 17.0 | 20.0 | 20.0 | 16.7 | 18.4 | 15.0 | 14.7 | 15.0 | 12.5 | 12.1 | 11.0 | 9.7 | 7.5 | t |
| [DEG] | 0～84 | 0～84 | 0～84 | 0～84 | 0～84 | 0～84 | 0～84 | 0～84 | 0～84 | 0～84 | 0～84 | 0～84 | 0～84 | 23～84 | 33～84 | [DEG] |
| | 5 | 5 | 4 | 4 | 4 | 4 | 4 | 3 | 3 | 3 | 3 | 3 | 3 | 3 | 3 | |
| | 35t | 35t | 35t | 35t | 35t | 35t | 35t | 35t | 35t | 35t | 35t | 35t | 35t | 35t | 35t | |

| MB | | 0.0 t | 7.6m | 360 ° | JPN |
|---|---|---|---|---|---|

| m | 10.2 | 13.7 | 13.7 | 17.2 | 17.2 | 17.2 | 17.2 | 20.7 | 20.7 | 20.7 | 20.7 | 24.2 | 24.2 | 24.2 | m |
|---|---|---|---|---|---|---|---|---|---|---|---|---|---|---|---|
| 1.6 | 75.00 | | | | | | | | | | | | | | 1.6 |
| 2.0 | 75.00 | 45.00 | 25.00 | 45.00 | 40.00 | 25.00 | 21.60 | 40.00 | 40.00 | 25.00 | 23.00 | 35.00 | 25.00 | 19.90 | 2.0 |
| 2.5 | 69.30 | 45.00 | 25.00 | 45.00 | 40.00 | 25.00 | 19.90 | 40.00 | 40.00 | 25.00 | 21.40 | 35.00 | 25.00 | 18.90 | 2.5 |
| 3.0 | 61.90 | 45.00 | 25.00 | 45.00 | 40.00 | 25.00 | 18.50 | 40.00 | 40.00 | 25.00 | 20.10 | 35.00 | 25.00 | 17.90 | 3.0 |
| 3.5 | 55.70 | 45.00 | 24.10 | 45.00 | 40.00 | 25.00 | 17.30 | 40.00 | 40.00 | 25.00 | 18.90 | 35.00 | 25.00 | 16.80 | 3.5 |
| 4.0 | 50.50 | 45.00 | 22.80 | 42.90 | 40.00 | 25.00 | 16.20 | 38.60 | 40.00 | 25.00 | 17.70 | 33.80 | 25.00 | 15.70 | 4.0 |
| 4.5 | 46.00 | 45.00 | 21.70 | 40.20 | 40.00 | 23.80 | 15.20 | 36.30 | 40.00 | 25.00 | 16.60 | 32.40 | 25.00 | 14.70 | 4.5 |
| 5.0 | 42.10 | 42.00 | 20.60 | 37.70 | 40.00 | 22.50 | 14.40 | 34.30 | 39.50 | 24.70 | 15.70 | 30.60 | 25.00 | 13.90 | 5.0 |
| 5.5 | 38.70 | 38.60 | 19.70 | 35.50 | 38.80 | 21.30 | 13.60 | 32.50 | 37.60 | 23.50 | 14.80 | 28.90 | 24.90 | 13.10 | 5.5 |
| 6.0 | 35.80 | 35.60 | 18.90 | 33.60 | 35.80 | 20.30 | 12.90 | 30.90 | 35.90 | 22.40 | 14.10 | 27.40 | 23.90 | 12.40 | 6.0 |
| 6.5 | 33.10 | 33.00 | 18.10 | 31.80 | 33.20 | 19.30 | 12.30 | 29.40 | 33.50 | 21.50 | 13.40 | 26.10 | 23.00 | 11.80 | 6.5 |
| 7.0 | 30.80 | 30.60 | 17.40 | 30.20 | 30.90 | 18.50 | 11.70 | 28.00 | 31.20 | 20.60 | 12.70 | 24.90 | 22.10 | 11.20 | 7.0 |
| 8.0 | | 23.30 | 16.20 | 23.00 | 23.80 | 16.90 | 10.70 | 23.40 | 24.40 | 19.00 | 11.60 | 22.70 | 20.50 | 10.20 | 8.0 |
| 9.0 | | 18.00 | 15.20 | 17.70 | 18.40 | 15.60 | 9.95 | 18.10 | 19.00 | 17.50 | 10.70 | 18.60 | 19.20 | 9.40 | 9.0 |
| 10.0 | | 14.40 | 14.50 | 14.10 | 14.80 | 14.60 | 9.20 | 14.40 | 15.30 | 16.30 | 9.95 | 14.90 | 16.80 | 8.65 | 10.0 |
| 11.0 | | | | 11.50 | 12.10 | 13.60 | 8.60 | 11.80 | 12.60 | 14.20 | 9.25 | 12.30 | 14.10 | 8.05 | 11.0 |
| 12.0 | | | | 9.60 | 10.20 | 11.90 | 8.10 | 9.90 | 10.60 | 12.10 | 8.65 | 10.30 | 12.00 | 7.50 | 12.0 |
| 14.0 | | | | 6.85 | 7.40 | 9.05 | 7.30 | 7.10 | 7.80 | 9.15 | 7.70 | 7.50 | 9.05 | 6.60 | 14.0 |
| 16.0 | | | | | | | | 5.25 | 5.90 | 7.20 | 6.90 | 5.60 | 7.10 | 5.90 | 16.0 |
| 18.0 | | | | | | | | | | | | 4.30 | 5.65 | 5.30 | 18.0 |
| 20.0 | | | | | | | | | | | | 3.30 | 4.60 | 4.85 | 20.0 |
| 21.0 | | | | | | | | | | | | 2.90 | 4.20 | 4.65 | 21.0 |
| 22.0 | | | | | | | | | | | | | | | 22.0 |
| 24.0 | | | | | | | | | | | | | | | 24.0 |
| 26.0 | | | | | | | | | | | | | | | 26.0 |
| 28.0 | | | | | | | | | | | | | | | 28.0 |
| 30.0 | | | | | | | | | | | | | | | 30.0 |
| 31.0 | | | | | | | | | | | | | | | 31.0 |
| 32.0 | | | | | | | | | | | | | | | 32.0 |
| 34.0 | | | | | | | | | | | | | | | 34.0 |
| 35.0 | | | | | | | | | | | | | | | 35.0 |
| 36.0 | | | | | | | | | | | | | | | 36.0 |
| 38.0 | | | | | | | | | | | | | | | 38.0 |
| 40.0 | | | | | | | | | | | | | | | 40.0 |
| 42.0 | | | | | | | | | | | | | | | 42.0 |
| 44.0 | | | | | | | | | | | | | | | 44.0 |
| 1 | 0 | 46 | 0 | 92 | 46 | 0 | 0 | 92 | 46 | 0 | 0 | 92 | 0 | 0 | 1 |
| 2 | 0 | 0 | 0 | 0 | 46 | 0 | 0 | 46 | 46 | 0 | 0 | 46 | 46 | 0 | 2 |
| 3 | 0 | 0 | 0 | 0 | 0 | 0 | 0 | 0 | 46 | 46 | 0 | 46 | 46 | 0 | 3 |
| 4 | 0 | 0 | 0 | 0 | 0 | 46 | 0 | 0 | 0 | 46 | 46 | 0 | 46 | 92 | 4 |
| 5 | 0 | 0 | 46 | 0 | 0 | 46 | 92 | 0 | 0 | 46 | 92 | 0 | 46 | 92 | 5 |
| ID | 1 | 23 | 2 | 24 | 25 | 12 | 3 | 26 | 27 | 13 | 4 | 28 | 14 | 5 | ID |
| t | 20.7 | 24.3 | 19.9 | 20.5 | 24.0 | 19.1 | 17.8 | 20.6 | 23.6 | 18.0 | 18.8 | 20.5 | 24.2 | 17.3 | t |
| [DEG] | 0～84 | 0～84 | 0～84 | 0～84 | 0～84 | 0～84 | 0～84 | 0～84 | 0～84 | 0～84 | 0～84 | 0～84 | 0～84 | 0～84 | [DEG] |
| | 20 | 9 | 5 | 9 | 8 | 5 | 5 | 8 | 8 | 5 | 5 | 7 | 5 | 4 | |
| | 重荷重装置 | 50t | 35t | 50t | 50t | 35t | 35t | 50t | 50t | 35t | 35t | 50t | 35t | 35t | |

| m | 27.7 | 27.7 | 27.7 | 31.2 | 31.2 | 31.2 | 34.7 | 34.7 | 34.7 | 38.2 | 38.2 | 41.7 | 41.7 | 45.2 | 48.0 | m |
|---|---|---|---|---|---|---|---|---|---|---|---|---|---|---|---|---|
| 1.6 | | | | | | | | | | | | | | | | 1.6 |
| 2.0 | | | | | | | | | | | | | | | | 2.0 |
| 2.5 | 25.00 | 25.00 | 18.40 | | | | | | | | | | | | | 2.5 |
| 3.0 | 25.00 | 25.00 | 17.60 | 20.00 | 20.00 | 16.70 | | | | | | | | | | 3.0 |
| 3.5 | 25.00 | 25.00 | 16.90 | 20.00 | 19.80 | 16.10 | 18.40 | 15.00 | 14.70 | | | | | | | 3.5 |
| 4.0 | 25.00 | 25.00 | 16.20 | 20.00 | 19.20 | 15.60 | 18.40 | 15.00 | 14.70 | 15.00 | 12.50 | | | | | 4.0 |
| 4.5 | 25.00 | 25.00 | 15.60 | 20.00 | 18.60 | 15.10 | 18.40 | 14.90 | 14.40 | 15.00 | 12.50 | | | | | 4.5 |
| 5.0 | 25.00 | 25.00 | 14.80 | 20.00 | 18.10 | 14.60 | 18.40 | 14.50 | 14.10 | 15.00 | 12.50 | 12.10 | 11.00 | | | 5.0 |
| 5.5 | 25.00 | 25.00 | 14.00 | 20.00 | 17.60 | 14.20 | 18.40 | 14.20 | 13.70 | 15.00 | 12.50 | 12.10 | 11.00 | 9.70 | 7.50 | 5.5 |
| 6.0 | 24.90 | 24.90 | 13.30 | 20.00 | 17.10 | 13.60 | 18.40 | 13.80 | 13.40 | 15.00 | 12.50 | 12.10 | 11.00 | 9.70 | 7.50 | 6.0 |
| 6.5 | 24.00 | 24.10 | 12.70 | 20.00 | 16.40 | 13.00 | 18.40 | 13.40 | 13.00 | 15.00 | 12.50 | 12.10 | 11.00 | 9.70 | 7.50 | 6.5 |
| 7.0 | 22.90 | 23.20 | 12.10 | 20.00 | 15.80 | 12.30 | 18.10 | 13.00 | 12.70 | 15.00 | 12.20 | 12.10 | 11.00 | 9.70 | 7.50 | 7.0 |
| 8.0 | 21.00 | 21.70 | 11.10 | 19.20 | 14.70 | 11.30 | 16.80 | 12.40 | 11.90 | 14.90 | 11.70 | 12.10 | 11.00 | 9.70 | 7.50 | 8.0 |
| 9.0 | 19.00 | 20.20 | 10.30 | 18.00 | 13.70 | 10.30 | 15.60 | 11.60 | 11.00 | 14.10 | 11.20 | 12.10 | 10.90 | 9.70 | 7.50 | 9.0 |
| 10.0 | 15.60 | 16.50 | 9.55 | 16.10 | 12.90 | 9.55 | 14.50 | 10.90 | 10.20 | 13.20 | 10.60 | 11.90 | 10.60 | 9.70 | 7.50 | 10.0 |
| 11.0 | 12.90 | 13.80 | 8.90 | 13.40 | 12.10 | 8.85 | 13.40 | 10.20 | 9.50 | 12.40 | 9.95 | 11.30 | 10.20 | 9.70 | 7.50 | 11.0 |
| 12.0 | 10.80 | 11.70 | 8.35 | 11.40 | 11.40 | 8.25 | 11.40 | 9.65 | 8.90 | 11.60 | 9.35 | 10.70 | 9.65 | 9.60 | 7.50 | 12.0 |
| 14.0 | 8.00 | 8.75 | 7.40 | 8.50 | 9.15 | 7.25 | 8.50 | 8.65 | 7.90 | 8.65 | 8.25 | 8.85 | 8.65 | 8.85 | 7.15 | 14.0 |
| 16.0 | 6.05 | 6.80 | 6.60 | 6.55 | 7.20 | 6.45 | 6.50 | 7.40 | 7.05 | 6.70 | 7.35 | 6.85 | 7.35 | 7.10 | 6.50 | 16.0 |
| 18.0 | 4.70 | 5.40 | 6.00 | 5.15 | 5.75 | 5.80 | 5.10 | 5.95 | 6.20 | 5.25 | 6.05 | 5.45 | 5.90 | 5.65 | 5.65 | 18.0 |
| 20.0 | 3.65 | 4.35 | 5.20 | 4.10 | 4.70 | 5.10 | 4.05 | 4.85 | 5.10 | 4.20 | 4.95 | 4.35 | 4.80 | 4.60 | 4.60 | 20.0 |
| 21.0 | 3.25 | 3.90 | 4.75 | 3.65 | 4.25 | 4.65 | 3.65 | 4.40 | 4.65 | 3.75 | 4.50 | 3.95 | 4.35 | 4.15 | 4.15 | 21.0 |
| 22.0 | 2.85 | 3.55 | 4.40 | 3.25 | 3.85 | 4.25 | 3.25 | 4.00 | 4.25 | 3.40 | 4.10 | 3.55 | 3.95 | 3.75 | 3.75 | 22.0 |
| 24.0 | 2.25 | 2.90 | 3.70 | 2.60 | 3.20 | 3.60 | 2.60 | 3.35 | 3.60 | 2.70 | 3.40 | 2.90 | 3.30 | 3.10 | 3.10 | 24.0 |
| 26.0 | | | | 2.10 | 2.65 | 3.05 | 2.05 | 2.80 | 3.05 | 2.20 | 2.85 | 2.35 | 2.75 | 2.55 | 2.55 | 26.0 |
| 28.0 | | | | 1.65 | 2.25 | 2.65 | 1.60 | 2.35 | 2.60 | 1.70 | 2.40 | 1.90 | 2.30 | 2.05 | 2.05 | 28.0 |
| 30.0 | | | | | | | 1.20 | 1.95 | 2.20 | 1.30 | 2.00 | 1.50 | 1.90 | 1.70 | 1.70 | 30.0 |
| 31.0 | | | | | | | 1.05 | 1.80 | 2.05 | 1.15 | 1.85 | 1.30 | 1.75 | 1.50 | 1.50 | 31.0 |
| 32.0 | | | | | | | | | | 0.95 | 1.70 | 1.15 | 1.55 | 1.35 | 1.35 | 32.0 |
| 34.0 | | | | | | | | | | 0.70 | 1.40 | 0.85 | 1.25 | 1.05 | 1.05 | 34.0 |
| 35.0 | | | | | | | | | | 0.55 | 1.30 | 0.70 | 1.15 | 0.90 | 0.90 | 35.0 |
| 36.0 | | | | | | | | | | | | 0.55 | 1.00 | 0.75 | 0.75 | 36.0 |
| 38.0 | | | | | | | | | | | | | 0.80 | 0.55 | 0.55 | 38.0 |
| 40.0 | | | | | | | | | | | | | | | | 40.0 |
| 42.0 | | | | | | | | | | | | | | | | 42.0 |
| 44.0 | | | | | | | | | | | | | | | | 44.0 |
| 1 | 92 | 46 | 0 | 92 | 46 | 0 | 92 | 46 | 0 | 92 | 0 | 92 | 46 | 92 | 100 | 1 |
| 2 | 46 | 46 | 0 | 46 | 46 | 0 | 92 | 46 | 46 | 92 | 92 | 92 | 92 | 92 | 100 | 2 |
| 3 | 46 | 46 | 46 | 46 | 46 | 92 | 46 | 46 | 92 | 92 | 92 | 92 | 92 | 92 | 100 | 3 |
| 4 | 46 | 46 | 92 | 46 | 46 | 92 | 46 | 92 | 92 | 46 | 92 | 92 | 92 | 92 | 100 | 4 |
| 5 | 0 | 46 | 92 | 46 | 92 | 92 | 46 | 92 | 92 | 46 | 92 | 46 | 92 | 92 | 100 | 5 |
| ID | 29 | 15 | 6 | 16 | 17 | 7 | 19 | 18 | 8 | 20 | 9 | 21 | 10 | 11 | 22 | ID |
| t | 20.1 | 22.2 | 17.0 | 20.0 | 20.0 | 16.7 | 18.4 | 15.0 | 14.7 | 15.0 | 12.5 | 12.1 | 11.0 | 9.7 | 7.5 | t |
| [DEG] | 0～84 | 0～84 | 0～84 | 0～84 | 0～84 | 0～84 | 0～84 | 0～84 | 0～84 | 0～84 | 0～84 | 4～84 | 0～84 | 25～84 | 29～84 | [DEG] |
| | 5 | 5 | 4 | 4 | 4 | 4 | 4 | 3 | 3 | 3 | 3 | 3 | 3 | 3 | 3 | |
| | 35t | 35t | 35t | 35t | 35t | 35t | 35t | 35t | 35t | 35t | 35t | 35t | 35t | 35t | 35t | |

# ブーム

| MB | | 0.0 t | 7.2m | 360 ° | JPN |
|---|---|---|---|---|---|

| m | 10.2 | 13.7 | 13.7 | 17.2 | 17.2 | 17.2 | 17.2 | 20.7 | 20.7 | 20.7 | 20.7 | 24.2 | 24.2 | 24.2 | m |
|---|---|---|---|---|---|---|---|---|---|---|---|---|---|---|---|
| 1.6 | 75.00 | | | | | | | | | | | | | | 1.6 |
| 2.0 | 75.00 | 45.00 | 25.00 | 45.00 | 40.00 | 25.00 | 21.60 | 40.00 | 40.00 | 25.00 | 23.00 | 35.00 | 25.00 | 19.90 | 2.0 |
| 2.5 | 68.10 | 45.00 | 25.00 | 45.00 | 40.00 | 25.00 | 19.90 | 40.00 | 40.00 | 25.00 | 21.40 | 35.00 | 25.00 | 18.90 | 2.5 |
| 3.0 | 60.70 | 45.00 | 25.00 | 45.00 | 40.00 | 25.00 | 18.50 | 40.00 | 40.00 | 25.00 | 20.10 | 35.00 | 25.00 | 17.90 | 3.0 |
| 3.5 | 54.60 | 45.00 | 24.10 | 45.00 | 40.00 | 25.00 | 17.30 | 40.00 | 40.00 | 25.00 | 18.90 | 35.00 | 25.00 | 16.80 | 3.5 |
| 4.0 | 49.30 | 45.00 | 22.80 | 42.90 | 40.00 | 25.00 | 16.20 | 38.60 | 40.00 | 25.00 | 17.70 | 33.80 | 25.00 | 15.70 | 4.0 |
| 4.5 | 44.90 | 44.70 | 21.70 | 40.20 | 40.00 | 23.80 | 15.20 | 36.30 | 40.00 | 25.00 | 16.60 | 32.40 | 25.00 | 14.70 | 4.5 |
| 5.0 | 41.00 | 40.90 | 20.60 | 37.70 | 40.00 | 22.50 | 14.40 | 34.30 | 39.50 | 24.70 | 15.70 | 30.60 | 25.00 | 13.90 | 5.0 |
| 5.5 | 37.70 | 37.60 | 19.70 | 35.50 | 37.80 | 21.30 | 13.60 | 32.50 | 37.60 | 23.50 | 14.80 | 28.90 | 24.90 | 13.10 | 5.5 |
| 6.0 | 34.80 | 34.60 | 18.90 | 33.60 | 34.90 | 20.30 | 12.90 | 30.90 | 35.20 | 22.40 | 14.10 | 27.40 | 23.90 | 12.40 | 6.0 |
| 6.5 | 32.20 | 32.10 | 18.10 | 31.80 | 32.30 | 19.30 | 12.30 | 29.40 | 32.50 | 21.50 | 13.40 | 26.10 | 23.00 | 11.80 | 6.5 |
| 7.0 | 28.80 | 28.30 | 17.40 | 28.00 | 28.90 | 18.50 | 11.70 | 27.20 | 28.40 | 20.60 | 12.70 | 24.90 | 22.10 | 11.20 | 7.0 |
| 8.0 | | 20.90 | 16.20 | 20.60 | 21.30 | 16.90 | 10.70 | 21.00 | 21.90 | 19.00 | 11.60 | 21.10 | 20.50 | 10.20 | 8.0 |
| 9.0 | | 16.20 | 15.20 | 15.90 | 16.60 | 15.60 | 9.95 | 16.30 | 17.10 | 17.50 | 10.70 | 16.80 | 18.80 | 9.40 | 9.0 |
| 10.0 | | 13.00 | 14.50 | 12.70 | 13.40 | 14.60 | 9.20 | 13.10 | 13.90 | 15.50 | 9.95 | 13.50 | 15.40 | 8.65 | 10.0 |
| 11.0 | | | | 10.40 | 11.00 | 12.80 | 8.60 | 10.70 | 11.40 | 13.00 | 9.25 | 11.20 | 12.90 | 8.05 | 11.0 |
| 12.0 | | | | 8.65 | 9.20 | 10.90 | 8.10 | 8.95 | 9.65 | 11.10 | 8.65 | 9.35 | 11.00 | 7.50 | 12.0 |
| 14.0 | | | | 6.15 | 6.70 | 8.30 | 7.30 | 6.40 | 7.05 | 8.40 | 7.70 | 6.80 | 8.30 | 6.60 | 14.0 |
| 16.0 | | | | | | | | 4.70 | 5.30 | 6.60 | 6.90 | 5.05 | 6.50 | 5.90 | 16.0 |
| 18.0 | | | | | | | | | | | | 3.80 | 5.15 | 5.30 | 18.0 |
| 20.0 | | | | | | | | | | | | 2.90 | 4.20 | 4.70 | 20.0 |
| 21.0 | | | | | | | | | | | | 2.50 | 3.80 | 4.30 | 21.0 |
| 22.0 | | | | | | | | | | | | | | | 22.0 |
| 24.0 | | | | | | | | | | | | | | | 24.0 |
| 26.0 | | | | | | | | | | | | | | | 26.0 |
| 28.0 | | | | | | | | | | | | | | | 28.0 |
| 30.0 | | | | | | | | | | | | | | | 30.0 |
| 31.0 | | | | | | | | | | | | | | | 31.0 |
| 32.0 | | | | | | | | | | | | | | | 32.0 |
| 34.0 | | | | | | | | | | | | | | | 34.0 |
| 35.0 | | | | | | | | | | | | | | | 35.0 |
| 36.0 | | | | | | | | | | | | | | | 36.0 |
| 38.0 | | | | | | | | | | | | | | | 38.0 |
| 40.0 | | | | | | | | | | | | | | | 40.0 |
| 42.0 | | | | | | | | | | | | | | | 42.0 |
| 44.0 | | | | | | | | | | | | | | | 44.0 |
| 1 | 0 | 46 | 0 | 92 | 46 | 0 | 0 | 92 | 46 | 0 | 0 | 92 | 0 | 0 | 1 |
| 2 | 0 | 0 | 0 | 0 | 46 | 0 | 0 | 46 | 46 | 0 | 0 | 46 | 46 | 0 | 2 |
| 3 | 0 | 0 | 0 | 0 | 0 | 0 | 0 | 0 | 46 | 46 | 0 | 46 | 46 | 0 | 3 |
| 4 | 0 | 0 | 0 | 0 | 0 | 46 | 0 | 0 | 0 | 46 | 46 | 0 | 46 | 92 | 4 |
| 5 | 0 | 0 | 46 | 0 | 0 | 46 | 92 | 0 | 0 | 46 | 92 | 0 | 46 | 92 | 5 |
| ID | 1 | 23 | 2 | 24 | 25 | 12 | 3 | 26 | 27 | 13 | 4 | 28 | 14 | 5 | ID |
| t | 20.7 | 24.3 | 19.9 | 20.5 | 24.0 | 19.1 | 17.8 | 20.6 | 23.6 | 18.0 | 18.8 | 20.5 | 24.2 | 17.3 | t |
| [DEG] | 0～84 | 0～84 | 0～84 | 0～84 | 0～84 | 0～84 | 0～84 | 0～84 | 0～84 | 0～84 | 0～84 | 0～84 | 0～84 | 0～84 | [DEG] |
| | 20 | 9 | 5 | 9 | 8 | 5 | 5 | 8 | 8 | 5 | 5 | 7 | 5 | 4 | |
| | 重荷重装置 | 50t | 35t | 50t | 50t | 35t | 35t | 50t | 50t | 35t | 35t | 50t | 35t | 35t | |

| m | 27.7 | 27.7 | 27.7 | 31.2 | 31.2 | 31.2 | 34.7 | 34.7 | 34.7 | 38.2 | 38.2 | 41.7 | 41.7 | 45.2 | 48.0 | m |
|---|---|---|---|---|---|---|---|---|---|---|---|---|---|---|---|---|
| 1.6 | | | | | | | | | | | | | | | | 1.6 |
| 2.0 | | | | | | | | | | | | | | | | 2.0 |
| 2.5 | 25.00 | 25.00 | 18.40 | | | | | | | | | | | | | 2.5 |
| 3.0 | 25.00 | 25.00 | 17.60 | 20.00 | 20.00 | 16.70 | | | | | | | | | | 3.0 |
| 3.5 | 25.00 | 25.00 | 16.90 | 20.00 | 19.80 | 16.10 | 18.40 | 15.00 | 14.70 | | | | | | | 3.5 |
| 4.0 | 25.00 | 25.00 | 16.20 | 20.00 | 19.20 | 15.60 | 18.40 | 15.00 | 14.70 | 15.00 | 12.50 | | | | | 4.0 |
| 4.5 | 25.00 | 25.00 | 15.60 | 20.00 | 18.60 | 15.10 | 18.40 | 14.90 | 14.40 | 15.00 | 12.50 | | | | | 4.5 |
| 5.0 | 25.00 | 25.00 | 14.80 | 20.00 | 18.10 | 14.60 | 18.40 | 14.50 | 14.10 | 15.00 | 12.50 | 12.10 | 11.00 | | | 5.0 |
| 5.5 | 25.00 | 25.00 | 14.00 | 20.00 | 17.60 | 14.20 | 18.40 | 14.20 | 13.70 | 15.00 | 12.50 | 12.10 | 11.00 | 9.70 | 7.50 | 5.5 |
| 6.0 | 24.90 | 24.90 | 13.30 | 20.00 | 17.10 | 13.60 | 18.40 | 13.80 | 13.40 | 15.00 | 12.50 | 12.10 | 11.00 | 9.70 | 7.50 | 6.0 |
| 6.5 | 24.00 | 24.10 | 12.70 | 20.00 | 16.40 | 13.00 | 18.40 | 13.40 | 13.00 | 15.00 | 12.50 | 12.10 | 11.00 | 9.70 | 7.50 | 6.5 |
| 7.0 | 22.90 | 23.20 | 12.10 | 20.00 | 15.80 | 12.30 | 18.10 | 13.00 | 12.70 | 15.00 | 12.20 | 12.10 | 11.00 | 9.70 | 7.50 | 7.0 |
| 8.0 | 21.00 | 21.70 | 11.10 | 19.20 | 14.70 | 11.30 | 16.80 | 12.40 | 11.90 | 14.90 | 11.70 | 12.10 | 11.00 | 9.70 | 7.50 | 8.0 |
| 9.0 | 17.30 | 18.40 | 10.30 | 17.40 | 13.70 | 10.30 | 15.60 | 11.60 | 11.00 | 14.10 | 11.20 | 12.10 | 10.90 | 9.70 | 7.50 | 9.0 |
| 10.0 | 14.10 | 15.10 | 9.55 | 14.70 | 12.90 | 9.55 | 14.30 | 10.90 | 10.20 | 13.20 | 10.60 | 11.90 | 10.60 | 9.70 | 7.50 | 10.0 |
| 11.0 | 11.70 | 12.60 | 8.90 | 12.30 | 12.10 | 8.85 | 12.30 | 10.20 | 9.50 | 12.20 | 9.95 | 11.30 | 10.20 | 9.70 | 7.50 | 11.0 |
| 12.0 | 9.90 | 10.70 | 8.35 | 10.40 | 11.10 | 8.25 | 10.40 | 9.65 | 8.90 | 10.60 | 9.35 | 10.60 | 9.65 | 9.60 | 7.50 | 12.0 |
| 14.0 | 7.25 | 8.05 | 7.40 | 7.75 | 8.40 | 7.25 | 7.75 | 8.65 | 7.90 | 7.90 | 8.25 | 8.10 | 8.60 | 8.35 | 7.15 | 14.0 |
| 16.0 | 5.50 | 6.20 | 6.60 | 5.95 | 6.60 | 6.45 | 5.95 | 6.80 | 7.05 | 6.10 | 6.90 | 6.25 | 6.75 | 6.50 | 6.50 | 16.0 |
| 18.0 | 4.20 | 4.90 | 5.80 | 4.65 | 5.25 | 5.70 | 4.65 | 5.45 | 5.70 | 4.80 | 5.55 | 4.95 | 5.40 | 5.15 | 5.15 | 18.0 |
| 20.0 | 3.25 | 3.95 | 4.80 | 3.65 | 4.25 | 4.70 | 3.65 | 4.45 | 4.70 | 3.80 | 4.50 | 3.95 | 4.40 | 4.15 | 4.15 | 20.0 |
| 21.0 | 2.85 | 3.55 | 4.35 | 3.25 | 3.85 | 4.25 | 3.25 | 4.00 | 4.25 | 3.40 | 4.10 | 3.55 | 4.00 | 3.75 | 3.75 | 21.0 |
| 22.0 | 2.50 | 3.15 | 4.00 | 2.90 | 3.50 | 3.90 | 2.90 | 3.65 | 3.90 | 3.00 | 3.75 | 3.20 | 3.60 | 3.40 | 3.40 | 22.0 |
| 24.0 | 1.90 | 2.60 | 3.40 | 2.30 | 2.85 | 3.25 | 2.25 | 3.00 | 3.25 | 2.40 | 3.10 | 2.55 | 2.95 | 2.75 | 2.75 | 24.0 |
| 26.0 | | | | 1.80 | 2.35 | 2.75 | 1.75 | 2.50 | 2.75 | 1.90 | 2.55 | 2.05 | 2.45 | 2.25 | 2.25 | 26.0 |
| 28.0 | | | | 1.35 | 1.95 | 2.35 | 1.30 | 2.10 | 2.30 | 1.45 | 2.15 | 1.60 | 2.05 | 1.80 | 1.80 | 28.0 |
| 30.0 | | | | | | | 0.95 | 1.75 | 1.95 | 1.05 | 1.80 | 1.20 | 1.65 | 1.45 | 1.45 | 30.0 |
| 31.0 | | | | | | | 0.80 | 1.60 | 1.80 | 0.90 | 1.60 | 1.05 | 1.50 | 1.25 | 1.25 | 31.0 |
| 32.0 | | | | | | | | | | 0.75 | 1.45 | 0.90 | 1.35 | 1.10 | 1.10 | 32.0 |
| 34.0 | | | | | | | | | | | 1.20 | 0.60 | 1.05 | 0.80 | 0.80 | 34.0 |
| 35.0 | | | | | | | | | | | 1.10 | 0.50 | 0.90 | 0.70 | 0.70 | 35.0 |
| 36.0 | | | | | | | | | | | | | 0.80 | 0.55 | 0.55 | 36.0 |
| 38.0 | | | | | | | | | | | | | 0.60 | | | 38.0 |
| 40.0 | | | | | | | | | | | | | | | | 40.0 |
| 42.0 | | | | | | | | | | | | | | | | 42.0 |
| 44.0 | | | | | | | | | | | | | | | | 44.0 |
| 1 | 92 | 46 | 0 | 92 | 46 | 0 | 92 | 46 | 0 | 92 | 0 | 92 | 46 | 92 | 100 | 1 |
| 2 | 46 | 46 | 0 | 46 | 46 | 0 | 92 | 46 | 46 | 92 | 92 | 92 | 92 | 92 | 100 | 2 |
| 3 | 46 | 46 | 46 | 46 | 46 | 92 | 46 | 46 | 92 | 92 | 92 | 92 | 92 | 92 | 100 | 3 |
| 4 | 46 | 46 | 92 | 46 | 46 | 92 | 46 | 92 | 92 | 46 | 92 | 92 | 92 | 92 | 100 | 4 |
| 5 | 0 | 46 | 92 | 46 | 92 | 92 | 46 | 92 | 92 | 46 | 92 | 46 | 92 | 92 | 100 | 5 |
| ID | 29 | 15 | 6 | 16 | 17 | 7 | 19 | 18 | 8 | 20 | 9 | 21 | 10 | 11 | 22 | ID |
| t | 20.1 | 22.2 | 17.0 | 20.0 | 20.0 | 16.7 | 18.4 | 15.0 | 14.7 | 15.0 | 12.5 | 12.1 | 11.0 | 9.7 | 7.5 | t |
| [DEG] | 0～84 | 0～84 | 0～84 | 0～84 | 0～84 | 0～84 | 0～84 | 0～84 | 0～84 | 0～84 | 0～84 | 24～84 | 0～84 | 32～84 | 34～84 | [DEG] |
| | 5 | 5 | 4 | 4 | 4 | 4 | 4 | 3 | 3 | 3 | 3 | 3 | 3 | 3 | 3 | |
| | 35t | 35t | 35t | 35t | 35t | 35t | 35t | 35t | 35t | 35t | 35t | 35t | 35t | 35t | 35t | |

| MB | | 0.0 t | 6.4m | 360 ° | JPN |
|---|---|---|---|---|---|

| m | 10.2 | 13.7 | 13.7 | 17.2 | 17.2 | 17.2 | 17.2 | 20.7 | 20.7 | 20.7 | 20.7 | 24.2 | 24.2 | 24.2 | m |
|---|---|---|---|---|---|---|---|---|---|---|---|---|---|---|---|
| 1.6 | 75.00 | | | | | | | | | | | | | | 1.6 |
| 2.0 | 74.50 | 45.00 | 25.00 | 45.00 | 40.00 | 25.00 | 21.60 | 40.00 | 40.00 | 25.00 | 23.00 | 35.00 | 25.00 | 19.90 | 2.0 |
| 2.5 | 65.50 | 45.00 | 25.00 | 45.00 | 40.00 | 25.00 | 19.90 | 40.00 | 40.00 | 25.00 | 21.40 | 35.00 | 25.00 | 18.90 | 2.5 |
| 3.0 | 58.10 | 45.00 | 25.00 | 45.00 | 40.00 | 25.00 | 18.50 | 40.00 | 40.00 | 25.00 | 20.10 | 35.00 | 25.00 | 17.90 | 3.0 |
| 3.5 | 52.00 | 45.00 | 24.10 | 45.00 | 40.00 | 25.00 | 17.30 | 40.00 | 40.00 | 25.00 | 18.90 | 35.00 | 25.00 | 16.80 | 3.5 |
| 4.0 | 46.80 | 45.00 | 22.80 | 42.90 | 40.00 | 25.00 | 16.20 | 38.60 | 40.00 | 25.00 | 17.70 | 33.80 | 25.00 | 15.70 | 4.0 |
| 4.5 | 42.50 | 42.40 | 21.70 | 40.20 | 40.00 | 23.80 | 15.20 | 36.30 | 40.00 | 25.00 | 16.60 | 32.40 | 25.00 | 14.70 | 4.5 |
| 5.0 | 38.80 | 38.60 | 20.60 | 37.70 | 38.80 | 22.50 | 14.40 | 34.30 | 39.20 | 24.70 | 15.70 | 30.60 | 25.00 | 13.90 | 5.0 |
| 5.5 | 35.50 | 35.40 | 19.70 | 35.20 | 35.60 | 21.30 | 13.60 | 32.50 | 35.70 | 23.50 | 14.80 | 28.90 | 24.90 | 13.10 | 5.5 |
| 6.0 | 32.10 | 31.60 | 18.90 | 30.30 | 31.30 | 20.30 | 12.90 | 29.20 | 30.40 | 22.40 | 14.10 | 27.40 | 23.90 | 12.40 | 6.0 |
| 6.5 | 26.60 | 26.20 | 18.10 | 25.80 | 26.70 | 19.30 | 12.30 | 25.20 | 26.40 | 21.50 | 13.40 | 24.80 | 23.00 | 11.80 | 6.5 |
| 7.0 | 22.60 | 22.10 | 17.40 | 21.80 | 22.60 | 18.50 | 11.70 | 22.10 | 23.20 | 20.60 | 12.70 | 21.80 | 22.10 | 11.20 | 7.0 |
| 8.0 | | 16.60 | 16.20 | 16.30 | 17.00 | 16.90 | 10.70 | 16.70 | 17.60 | 19.00 | 11.60 | 17.30 | 19.30 | 10.20 | 8.0 |
| 9.0 | | 13.00 | 14.60 | 12.70 | 13.40 | 15.30 | 9.95 | 13.10 | 13.90 | 15.50 | 10.70 | 13.60 | 15.40 | 9.40 | 9.0 |
| 10.0 | | 10.40 | 12.00 | 10.20 | 10.80 | 12.60 | 9.20 | 10.50 | 11.20 | 12.80 | 9.95 | 11.00 | 12.70 | 8.65 | 10.0 |
| 11.0 | | | | 8.30 | 8.90 | 10.60 | 8.60 | 8.60 | 9.35 | 10.80 | 9.25 | 9.05 | 10.70 | 8.05 | 11.0 |
| 12.0 | | | | 6.85 | 7.40 | 9.05 | 8.10 | 7.15 | 7.85 | 9.20 | 8.65 | 7.55 | 9.15 | 7.50 | 12.0 |
| 14.0 | | | | 4.80 | 5.30 | 6.85 | 6.85 | 5.05 | 5.65 | 6.95 | 7.35 | 5.40 | 6.85 | 6.60 | 14.0 |
| 16.0 | | | | | | | | 3.60 | 4.20 | 5.45 | 5.75 | 3.95 | 5.35 | 5.85 | 16.0 |
| 18.0 | | | | | | | | | | | | 2.90 | 4.20 | 4.70 | 18.0 |
| 20.0 | | | | | | | | | | | | 2.05 | 3.40 | 3.85 | 20.0 |
| 21.0 | | | | | | | | | | | | 1.75 | 3.05 | 3.50 | 21.0 |
| 22.0 | | | | | | | | | | | | | | | 22.0 |
| 24.0 | | | | | | | | | | | | | | | 24.0 |
| 26.0 | | | | | | | | | | | | | | | 26.0 |
| 28.0 | | | | | | | | | | | | | | | 28.0 |
| 30.0 | | | | | | | | | | | | | | | 30.0 |
| 31.0 | | | | | | | | | | | | | | | 31.0 |
| 32.0 | | | | | | | | | | | | | | | 32.0 |
| 34.0 | | | | | | | | | | | | | | | 34.0 |
| 35.0 | | | | | | | | | | | | | | | 35.0 |
| 36.0 | | | | | | | | | | | | | | | 36.0 |
| 38.0 | | | | | | | | | | | | | | | 38.0 |
| 40.0 | | | | | | | | | | | | | | | 40.0 |
| 42.0 | | | | | | | | | | | | | | | 42.0 |
| 44.0 | | | | | | | | | | | | | | | 44.0 |
| 1 | 0 | 46 | 0 | 92 | 46 | 0 | 0 | 92 | 46 | 0 | 0 | 92 | 0 | 0 | 1 |
| 2 | 0 | 0 | 0 | 0 | 46 | 0 | 0 | 46 | 46 | 0 | 0 | 46 | 46 | 0 | 2 |
| 3 | 0 | 0 | 0 | 0 | 0 | 0 | 0 | 0 | 46 | 46 | 0 | 46 | 46 | 0 | 3 |
| 4 | 0 | 0 | 0 | 0 | 0 | 46 | 0 | 0 | 0 | 46 | 46 | 0 | 46 | 92 | 4 |
| 5 | 0 | 0 | 46 | 0 | 0 | 46 | 92 | 0 | 0 | 46 | 92 | 0 | 46 | 92 | 5 |
| ID | 1 | 23 | 2 | 24 | 25 | 12 | 3 | 26 | 27 | 13 | 4 | 28 | 14 | 5 | ID |
| t | 20.7 | 24.3 | 19.9 | 20.5 | 24.0 | 19.1 | 17.8 | 20.6 | 23.6 | 18.0 | 18.8 | 20.5 | 24.2 | 17.3 | t |
| [DEG] | 0～84 | 0～84 | 0～84 | 0～84 | 0～84 | 0～84 | 0～84 | 0～84 | 0～84 | 0～84 | 0～84 | 0～84 | 0～84 | 0～84 | [DEG] |
| | 20 | 9 | 5 | 9 | 8 | 5 | 5 | 8 | 8 | 5 | 5 | 7 | 5 | 4 | |
| | 重荷重装置 | 50t | 35t | 50t | 50t | 35t | 35t | 50t | 50t | 35t | 35t | 50t | 35t | 35t | |

| m | 27.7 | 27.7 | 27.7 | 31.2 | 31.2 | 31.2 | 34.7 | 34.7 | 34.7 | 38.2 | 38.2 | 41.7 | 41.7 | 45.2 | 48.0 | m |
|---|---|---|---|---|---|---|---|---|---|---|---|---|---|---|---|---|
| 1.6 | | | | | | | | | | | | | | | | 1.6 |
| 2.0 | | | | | | | | | | | | | | | | 2.0 |
| 2.5 | 25.00 | 25.00 | 18.40 | | | | | | | | | | | | | 2.5 |
| 3.0 | 25.00 | 25.00 | 17.60 | 20.00 | 20.00 | 16.70 | | | | | | | | | | 3.0 |
| 3.5 | 25.00 | 25.00 | 16.90 | 20.00 | 19.80 | 16.10 | 18.40 | 15.00 | 14.70 | | | | | | | 3.5 |
| 4.0 | 25.00 | 25.00 | 16.20 | 20.00 | 19.20 | 15.60 | 18.40 | 15.00 | 14.70 | 15.00 | 12.50 | | | | | 4.0 |
| 4.5 | 25.00 | 25.00 | 15.60 | 20.00 | 18.60 | 15.10 | 18.40 | 14.90 | 14.40 | 15.00 | 12.50 | | | | | 4.5 |
| 5.0 | 25.00 | 25.00 | 14.80 | 20.00 | 18.10 | 14.60 | 18.40 | 14.50 | 14.10 | 15.00 | 12.50 | 12.10 | 11.00 | | | 5.0 |
| 5.5 | 25.00 | 25.00 | 14.00 | 20.00 | 17.60 | 14.20 | 18.40 | 14.20 | 13.70 | 15.00 | 12.50 | 12.10 | 11.00 | 9.70 | 7.50 | 5.5 |
| 6.0 | 24.90 | 24.90 | 13.30 | 20.00 | 17.10 | 13.60 | 18.40 | 13.80 | 13.40 | 15.00 | 12.50 | 12.10 | 11.00 | 9.70 | 7.50 | 6.0 |
| 6.5 | 24.00 | 24.10 | 12.70 | 20.00 | 16.40 | 13.00 | 18.40 | 13.40 | 13.00 | 15.00 | 12.50 | 12.10 | 11.00 | 9.70 | 7.50 | 6.5 |
| 7.0 | 21.70 | 23.00 | 12.10 | 20.00 | 15.80 | 12.30 | 18.10 | 13.00 | 12.70 | 15.00 | 12.20 | 12.10 | 11.00 | 9.70 | 7.50 | 7.0 |
| 8.0 | 17.50 | 18.60 | 11.10 | 17.60 | 14.70 | 11.30 | 16.80 | 12.40 | 11.90 | 14.90 | 11.70 | 12.10 | 11.00 | 9.70 | 7.50 | 8.0 |
| 9.0 | 14.20 | 15.10 | 10.30 | 14.60 | 13.70 | 10.30 | 14.20 | 11.60 | 11.00 | 14.00 | 11.20 | 12.10 | 10.90 | 9.70 | 7.50 | 9.0 |
| 10.0 | 11.50 | 12.40 | 9.55 | 12.10 | 12.80 | 9.55 | 12.00 | 10.90 | 10.20 | 11.90 | 10.60 | 11.90 | 10.60 | 9.70 | 7.50 | 10.0 |
| 11.0 | 9.60 | 10.40 | 8.90 | 10.10 | 10.80 | 8.85 | 10.10 | 10.20 | 9.50 | 10.20 | 9.95 | 10.30 | 10.20 | 9.70 | 7.50 | 11.0 |
| 12.0 | 8.05 | 8.85 | 8.35 | 8.55 | 9.25 | 8.25 | 8.55 | 9.50 | 8.90 | 8.75 | 9.35 | 8.95 | 9.45 | 9.10 | 7.50 | 12.0 |
| 14.0 | 5.85 | 6.60 | 7.40 | 6.35 | 7.00 | 7.25 | 6.35 | 7.20 | 7.45 | 6.50 | 7.30 | 6.65 | 7.15 | 6.90 | 6.90 | 14.0 |
| 16.0 | 4.35 | 5.05 | 5.95 | 4.80 | 5.40 | 5.90 | 4.80 | 5.60 | 5.90 | 4.95 | 5.70 | 5.15 | 5.60 | 5.35 | 5.35 | 16.0 |
| 18.0 | 3.30 | 3.95 | 4.80 | 3.70 | 4.30 | 4.75 | 3.70 | 4.50 | 4.75 | 3.85 | 4.55 | 4.00 | 4.45 | 4.20 | 4.20 | 18.0 |
| 20.0 | 2.45 | 3.10 | 3.95 | 2.85 | 3.45 | 3.85 | 2.85 | 3.60 | 3.85 | 2.95 | 3.70 | 3.15 | 3.55 | 3.35 | 3.35 | 20.0 |
| 21.0 | 2.10 | 2.75 | 3.60 | 2.50 | 3.05 | 3.50 | 2.50 | 3.25 | 3.50 | 2.60 | 3.30 | 2.80 | 3.20 | 3.00 | 3.00 | 21.0 |
| 22.0 | 1.80 | 2.45 | 3.30 | 2.20 | 2.75 | 3.15 | 2.20 | 2.95 | 3.15 | 2.30 | 3.00 | 2.45 | 2.90 | 2.65 | 2.65 | 22.0 |
| 24.0 | 1.25 | 1.95 | 2.75 | 1.65 | 2.20 | 2.60 | 1.65 | 2.40 | 2.60 | 1.75 | 2.45 | 1.90 | 2.35 | 2.10 | 2.10 | 24.0 |
| 26.0 | | | | 1.20 | 1.80 | 2.20 | 1.15 | 1.95 | 2.15 | 1.30 | 2.00 | 1.45 | 1.90 | 1.65 | 1.65 | 26.0 |
| 28.0 | | | | 0.80 | 1.45 | 1.85 | 0.75 | 1.55 | 1.80 | 0.90 | 1.60 | 1.05 | 1.50 | 1.25 | 1.25 | 28.0 |
| 30.0 | | | | | | | | 1.25 | 1.50 | 0.55 | 1.30 | 0.70 | 1.15 | 0.90 | 0.90 | 30.0 |
| 31.0 | | | | | | | | 1.10 | 1.35 | | 1.15 | 0.55 | 1.00 | 0.75 | 0.75 | 31.0 |
| 32.0 | | | | | | | | | | | 1.00 | | 0.85 | 0.65 | 0.60 | 32.0 |
| 34.0 | | | | | | | | | | | 0.75 | | 0.60 | | | 34.0 |
| 35.0 | | | | | | | | | | | 0.65 | | 0.50 | | | 35.0 |
| 36.0 | | | | | | | | | | | | | | | | 36.0 |
| 38.0 | | | | | | | | | | | | | | | | 38.0 |
| 40.0 | | | | | | | | | | | | | | | | 40.0 |
| 42.0 | | | | | | | | | | | | | | | | 42.0 |
| 44.0 | | | | | | | | | | | | | | | | 44.0 |
| 1 | 92 | 46 | 0 | 92 | 46 | 0 | 92 | 46 | 0 | 92 | 0 | 92 | 46 | 92 | 100 | 1 |
| 2 | 46 | 46 | 0 | 46 | 46 | 0 | 92 | 46 | 46 | 92 | 92 | 92 | 92 | 92 | 100 | 2 |
| 3 | 46 | 46 | 46 | 46 | 46 | 92 | 46 | 46 | 92 | 92 | 92 | 92 | 92 | 92 | 100 | 3 |
| 4 | 46 | 46 | 92 | 46 | 46 | 92 | 46 | 92 | 92 | 46 | 92 | 92 | 92 | 92 | 100 | 4 |
| 5 | 0 | 46 | 92 | 46 | 92 | 92 | 46 | 92 | 92 | 46 | 92 | 46 | 92 | 92 | 100 | 5 |
| ID | 29 | 15 | 6 | 16 | 17 | 7 | 19 | 18 | 8 | 20 | 9 | 21 | 10 | 11 | 22 | ID |
| t | 20.1 | 22.2 | 17.0 | 20.0 | 20.0 | 16.7 | 18.4 | 15.0 | 14.7 | 15.0 | 12.5 | 12.1 | 11.0 | 9.7 | 7.5 | t |
| [DEG] | 0～84 | 0～84 | 0～84 | 0～84 | 0～84 | 0～84 | 23～84 | 0～84 | 0～84 | 27～84 | 0～84 | 33～84 | 24～84 | 36～84 | 42～84 | [DEG] |
| | 5 | 5 | 4 | 4 | 4 | 4 | 4 | 3 | 3 | 3 | 3 | 3 | 3 | 3 | 3 | |
| | 35t | 35t | 35t | 35t | 35t | 35t | 35t | 35t | 35t | 35t | 35t | 35t | 35t | 35t | 35t | |

# ブーム

| MB | | 0.0 t | 5.38m | 360 ° | JPN |
|---|---|---|---|---|---|

| m | 10.2 | 13.7 | 13.7 | 17.2 | 17.2 | 17.2 | 17.2 | 20.7 | 20.7 | 20.7 | 20.7 | 24.2 | 24.2 | 24.2 | m |
|---|---|---|---|---|---|---|---|---|---|---|---|---|---|---|---|
| 1.6 | 75.00 | | | | | | | | | | | | | | 1.6 |
| 2.0 | 70.40 | 45.00 | 25.00 | 45.00 | 40.00 | 25.00 | 21.60 | 40.00 | 40.00 | 25.00 | 23.00 | 35.00 | 25.00 | 19.90 | 2.0 |
| 2.5 | 61.30 | 45.00 | 25.00 | 45.00 | 40.00 | 25.00 | 19.90 | 40.00 | 40.00 | 25.00 | 21.40 | 35.00 | 25.00 | 18.90 | 2.5 |
| 3.0 | 54.00 | 45.00 | 25.00 | 45.00 | 40.00 | 25.00 | 18.50 | 40.00 | 40.00 | 25.00 | 20.10 | 35.00 | 25.00 | 17.90 | 3.0 |
| 3.5 | 48.00 | 45.00 | 24.10 | 45.00 | 40.00 | 25.00 | 17.30 | 40.00 | 40.00 | 25.00 | 18.90 | 35.00 | 25.00 | 16.80 | 3.5 |
| 4.0 | 43.10 | 42.90 | 22.80 | 42.80 | 40.00 | 25.00 | 16.20 | 38.60 | 40.00 | 25.00 | 17.70 | 33.80 | 25.00 | 15.70 | 4.0 |
| 4.5 | 38.90 | 38.70 | 21.70 | 36.60 | 37.80 | 23.80 | 15.20 | 34.80 | 36.10 | 25.00 | 16.60 | 32.40 | 25.00 | 14.70 | 4.5 |
| 5.0 | 33.80 | 32.60 | 20.60 | 30.10 | 31.10 | 22.50 | 14.40 | 28.80 | 30.10 | 24.70 | 15.70 | 28.00 | 25.00 | 13.90 | 5.0 |
| 5.5 | 27.00 | 26.70 | 19.70 | 25.30 | 26.20 | 21.30 | 13.60 | 24.40 | 25.60 | 23.50 | 14.80 | 23.90 | 24.90 | 13.10 | 5.5 |
| 6.0 | 22.30 | 22.00 | 18.90 | 21.60 | 22.50 | 20.30 | 12.90 | 21.00 | 22.10 | 22.40 | 14.10 | 20.70 | 23.20 | 12.40 | 6.0 |
| 6.5 | 18.90 | 18.50 | 18.10 | 18.20 | 19.00 | 19.30 | 12.30 | 18.30 | 19.40 | 21.50 | 13.40 | 18.10 | 20.50 | 11.80 | 6.5 |
| 7.0 | 16.20 | 15.90 | 17.40 | 15.60 | 16.30 | 18.40 | 11.70 | 16.00 | 16.80 | 18.70 | 12.70 | 16.10 | 18.30 | 11.20 | 7.0 |
| 8.0 | | 12.00 | 13.70 | 11.80 | 12.40 | 14.40 | 10.70 | 12.10 | 12.90 | 14.60 | 11.60 | 12.60 | 14.50 | 10.20 | 8.0 |
| 9.0 | | 9.45 | 10.90 | 9.20 | 9.80 | 11.60 | 9.95 | 9.55 | 10.20 | 11.80 | 10.70 | 10.00 | 11.70 | 9.40 | 9.0 |
| 10.0 | | 7.60 | 9.00 | 7.35 | 7.90 | 9.60 | 9.20 | 7.65 | 8.30 | 9.75 | 9.95 | 8.05 | 9.65 | 8.65 | 10.0 |
| 11.0 | | | | 5.90 | 6.45 | 8.05 | 8.10 | 6.20 | 6.85 | 8.25 | 8.60 | 6.60 | 8.15 | 8.05 | 11.0 |
| 12.0 | | | | 4.80 | 5.30 | 6.90 | 6.90 | 5.05 | 5.70 | 7.00 | 7.40 | 5.45 | 6.95 | 7.50 | 12.0 |
| 14.0 | | | | 3.20 | 3.70 | 5.15 | 5.15 | 3.40 | 4.00 | 5.25 | 5.60 | 3.75 | 5.15 | 5.70 | 14.0 |
| 16.0 | | | | | | | | 2.30 | 2.85 | 4.05 | 4.35 | 2.60 | 3.95 | 4.45 | 16.0 |
| 18.0 | | | | | | | | | | | | 1.75 | 3.05 | 3.50 | 18.0 |
| 20.0 | | | | | | | | | | | | 1.05 | 2.35 | 2.80 | 20.0 |
| 21.0 | | | | | | | | | | | | 0.75 | 2.10 | 2.55 | 21.0 |
| 22.0 | | | | | | | | | | | | | | | 22.0 |
| 24.0 | | | | | | | | | | | | | | | 24.0 |
| 26.0 | | | | | | | | | | | | | | | 26.0 |
| 28.0 | | | | | | | | | | | | | | | 28.0 |
| 30.0 | | | | | | | | | | | | | | | 30.0 |
| 31.0 | | | | | | | | | | | | | | | 31.0 |
| 32.0 | | | | | | | | | | | | | | | 32.0 |
| 34.0 | | | | | | | | | | | | | | | 34.0 |
| 35.0 | | | | | | | | | | | | | | | 35.0 |
| 36.0 | | | | | | | | | | | | | | | 36.0 |
| 38.0 | | | | | | | | | | | | | | | 38.0 |
| 40.0 | | | | | | | | | | | | | | | 40.0 |
| 42.0 | | | | | | | | | | | | | | | 42.0 |
| 44.0 | | | | | | | | | | | | | | | 44.0 |
| 1 | 0 | 46 | 0 | 92 | 46 | 0 | 0 | 92 | 46 | 0 | 0 | 92 | 0 | 0 | 1 |
| 2 | 0 | 0 | 0 | 0 | 46 | 0 | 0 | 46 | 46 | 0 | 0 | 46 | 46 | 0 | 2 |
| 3 | 0 | 0 | 0 | 0 | 0 | 0 | 0 | 0 | 46 | 46 | 0 | 46 | 46 | 0 | 3 |
| 4 | 0 | 0 | 0 | 0 | 0 | 46 | 0 | 0 | 0 | 46 | 46 | 0 | 46 | 92 | 4 |
| 5 | 0 | 0 | 46 | 0 | 0 | 46 | 92 | 0 | 0 | 46 | 92 | 0 | 46 | 92 | 5 |
| ID | 1 | 23 | 2 | 24 | 25 | 12 | 3 | 26 | 27 | 13 | 4 | 28 | 14 | 5 | ID |
| t | 20.7 | 24.3 | 19.9 | 20.5 | 24.0 | 19.1 | 17.8 | 20.6 | 23.6 | 18.0 | 18.8 | 20.5 | 24.2 | 17.3 | t |
| [DEG] | 0～84 | 0～84 | 0～84 | 0～84 | 0～84 | 0～84 | 0～84 | 0～84 | 0～84 | 0～84 | 0～84 | 0～84 | 0～84 | 0～84 | [DEG] |
| | 20 | 9 | 5 | 9 | 8 | 5 | 5 | 8 | 8 | 5 | 5 | 7 | 5 | 4 | |
| | 重荷重装置 | 50t | 35t | 50t | 50t | 35t | 35t | 50t | 50t | 35t | 35t | 50t | 35t | 35t | |

| m | 27.7 | 27.7 | 27.7 | 31.2 | 31.2 | 31.2 | 34.7 | 34.7 | 34.7 | 38.2 | 38.2 | 41.7 | 41.7 | 45.2 | 48.0 | m |
|---|---|---|---|---|---|---|---|---|---|---|---|---|---|---|---|---|
| 1.6 | | | | | | | | | | | | | | | | 1.6 |
| 2.0 | | | | | | | | | | | | | | | | 2.0 |
| 2.5 | 25.00 | 25.00 | 18.40 | | | | | | | | | | | | | 2.5 |
| 3.0 | 25.00 | 25.00 | 17.60 | 20.00 | 20.00 | 16.70 | | | | | | | | | | 3.0 |
| 3.5 | 25.00 | 25.00 | 16.90 | 20.00 | 19.80 | 16.10 | 18.40 | 15.00 | 14.70 | | | | | | | 3.5 |
| 4.0 | 25.00 | 25.00 | 16.20 | 20.00 | 19.20 | 15.60 | 18.40 | 15.00 | 14.70 | 15.00 | 12.50 | | | | | 4.0 |
| 4.5 | 25.00 | 25.00 | 15.60 | 20.00 | 18.60 | 15.10 | 18.40 | 14.90 | 14.40 | 15.00 | 12.50 | | | | | 4.5 |
| 5.0 | 25.00 | 25.00 | 14.80 | 20.00 | 18.10 | 14.60 | 18.40 | 14.50 | 14.10 | 15.00 | 12.50 | 12.10 | 11.00 | | | 5.0 |
| 5.5 | 23.60 | 24.90 | 14.00 | 20.00 | 17.60 | 14.20 | 18.40 | 14.20 | 13.70 | 15.00 | 12.50 | 12.10 | 11.00 | 9.70 | 7.50 | 5.5 |
| 6.0 | 20.60 | 21.80 | 13.30 | 20.00 | 17.10 | 13.60 | 18.40 | 13.80 | 13.40 | 15.00 | 12.50 | 12.10 | 11.00 | 9.70 | 7.50 | 6.0 |
| 6.5 | 18.10 | 19.30 | 12.70 | 18.20 | 16.40 | 13.00 | 17.50 | 13.40 | 13.00 | 15.00 | 12.50 | 12.10 | 11.00 | 9.70 | 7.50 | 6.5 |
| 7.0 | 16.10 | 17.30 | 12.10 | 16.20 | 15.80 | 12.30 | 15.70 | 13.00 | 12.70 | 15.00 | 12.20 | 12.10 | 11.00 | 9.70 | 7.50 | 7.0 |
| 8.0 | 13.00 | 14.10 | 11.10 | 13.20 | 14.20 | 11.30 | 12.80 | 12.40 | 11.90 | 12.70 | 11.70 | 12.10 | 11.00 | 9.70 | 7.50 | 8.0 |
| 9.0 | 10.50 | 11.40 | 10.30 | 11.00 | 11.80 | 10.30 | 10.70 | 11.60 | 11.00 | 10.60 | 11.20 | 10.60 | 10.90 | 9.70 | 7.50 | 9.0 |
| 10.0 | 8.60 | 9.40 | 9.55 | 9.10 | 9.80 | 9.55 | 9.05 | 10.00 | 10.20 | 9.00 | 10.00 | 9.05 | 9.65 | 9.10 | 7.50 | 10.0 |
| 11.0 | 7.10 | 7.85 | 8.85 | 7.60 | 8.25 | 8.75 | 7.60 | 8.50 | 8.80 | 7.70 | 8.60 | 7.80 | 8.40 | 7.90 | 7.50 | 11.0 |
| 12.0 | 5.90 | 6.65 | 7.65 | 6.40 | 7.05 | 7.55 | 6.40 | 7.25 | 7.55 | 6.55 | 7.35 | 6.75 | 7.25 | 6.90 | 6.80 | 12.0 |
| 14.0 | 4.20 | 4.90 | 5.80 | 4.65 | 5.25 | 5.75 | 4.65 | 5.45 | 5.75 | 4.80 | 5.55 | 5.00 | 5.45 | 5.20 | 5.20 | 14.0 |
| 16.0 | 3.00 | 3.70 | 4.55 | 3.45 | 4.05 | 4.45 | 3.45 | 4.20 | 4.50 | 3.55 | 4.30 | 3.75 | 4.20 | 3.95 | 3.95 | 16.0 |
| 18.0 | 2.15 | 2.80 | 3.65 | 2.55 | 3.10 | 3.55 | 2.55 | 3.30 | 3.55 | 2.65 | 3.40 | 2.85 | 3.25 | 3.05 | 3.05 | 18.0 |
| 20.0 | 1.45 | 2.10 | 2.90 | 1.85 | 2.40 | 2.85 | 1.85 | 2.60 | 2.85 | 1.95 | 2.65 | 2.15 | 2.55 | 2.35 | 2.35 | 20.0 |
| 21.0 | 1.15 | 1.85 | 2.65 | 1.55 | 2.15 | 2.55 | 1.55 | 2.30 | 2.55 | 1.70 | 2.35 | 1.85 | 2.25 | 2.05 | 2.05 | 21.0 |
| 22.0 | 0.90 | 1.55 | 2.35 | 1.30 | 1.85 | 2.25 | 1.30 | 2.05 | 2.25 | 1.40 | 2.10 | 1.60 | 2.00 | 1.75 | 1.80 | 22.0 |
| 24.0 | | 1.15 | 1.95 | 0.85 | 1.40 | 1.80 | 0.80 | 1.60 | 1.80 | 0.95 | 1.65 | 1.10 | 1.55 | 1.30 | 1.30 | 24.0 |
| 26.0 | | | | | 1.05 | 1.45 | | 1.20 | 1.45 | | 1.25 | | 1.15 | 0.90 | 0.90 | 26.0 |
| 28.0 | | | | | 0.75 | 1.15 | | 0.85 | 1.10 | | 0.95 | | 0.80 | | | 28.0 |
| 30.0 | | | | | | | | 0.60 | 0.85 | | 0.65 | | 0.50 | | | 30.0 |
| 31.0 | | | | | | | | 0.50 | 0.75 | | 0.55 | | | | | 31.0 |
| 32.0 | | | | | | | | | | | | | | | | 32.0 |
| 34.0 | | | | | | | | | | | | | | | | 34.0 |
| 35.0 | | | | | | | | | | | | | | | | 35.0 |
| 36.0 | | | | | | | | | | | | | | | | 36.0 |
| 38.0 | | | | | | | | | | | | | | | | 38.0 |
| 40.0 | | | | | | | | | | | | | | | | 40.0 |
| 42.0 | | | | | | | | | | | | | | | | 42.0 |
| 44.0 | | | | | | | | | | | | | | | | 44.0 |
| 1 | 92 | 46 | 0 | 92 | 46 | 0 | 92 | 46 | 0 | 92 | 0 | 92 | 46 | 92 | 100 | 1 |
| 2 | 46 | 46 | 0 | 46 | 46 | 0 | 92 | 46 | 46 | 92 | 92 | 92 | 92 | 92 | 100 | 2 |
| 3 | 46 | 46 | 46 | 46 | 46 | 92 | 46 | 46 | 92 | 92 | 92 | 92 | 92 | 92 | 100 | 3 |
| 4 | 46 | 46 | 92 | 46 | 46 | 92 | 46 | 92 | 92 | 46 | 92 | 92 | 92 | 92 | 100 | 4 |
| 5 | 0 | 46 | 92 | 46 | 92 | 92 | 46 | 92 | 92 | 46 | 92 | 46 | 92 | 92 | 100 | 5 |
| ID | 29 | 15 | 6 | 16 | 17 | 7 | 19 | 18 | 8 | 20 | 9 | 21 | 10 | 11 | 22 | ID |
| t | 20.1 | 22.2 | 17.0 | 20.0 | 20.0 | 16.7 | 18.4 | 15.0 | 14.7 | 15.0 | 12.5 | 12.1 | 11.0 | 9.7 | 7.5 | t |
| [DEG] | 0～84 | 0～84 | 0～84 | 27～84 | 0～84 | 0～84 | 33～84 | 0～84 | 0～84 | 39～84 | 26～84 | 43～84 | 37～84 | 46～84 | 50～84 | [DEG] |
| | 5 | 5 | 4 | 4 | 4 | 4 | 4 | 3 | 3 | 3 | 3 | 3 | 3 | 3 | 3 | |
| | 35t | 35t | 35t | 35t | 35t | 35t | 35t | 35t | 35t | 35t | 35t | 35t | 35t | 35t | 35t | |

| MB | | 0.0 t | 4.18m | 360 ° | JPN |
|---|---|---|---|---|---|

| m | 10.2 | 13.7 | 13.7 | 17.2 | 17.2 | 17.2 | 17.2 | 20.7 | 20.7 | 20.7 | 20.7 | 24.2 | 24.2 | 24.2 | m |
|---|---|---|---|---|---|---|---|---|---|---|---|---|---|---|---|
| 1.6 | 72.90 | | | | | | | | | | | | | | 1.6 |
| 2.0 | 63.90 | 45.00 | 25.00 | 45.00 | 40.00 | 25.00 | 21.60 | 40.00 | 40.00 | 25.00 | 23.00 | 35.00 | 25.00 | 19.90 | 2.0 |
| 2.5 | 55.00 | 45.00 | 25.00 | 45.00 | 40.00 | 25.00 | 19.90 | 40.00 | 40.00 | 25.00 | 21.40 | 35.00 | 25.00 | 18.90 | 2.5 |
| 3.0 | 47.90 | 45.00 | 25.00 | 41.00 | 40.00 | 25.00 | 18.50 | 37.50 | 39.00 | 25.00 | 20.10 | 34.90 | 25.00 | 17.90 | 3.0 |
| 3.5 | 40.40 | 35.50 | 24.10 | 31.70 | 32.80 | 25.00 | 17.30 | 29.50 | 30.80 | 25.00 | 18.90 | 28.00 | 25.00 | 16.80 | 3.5 |
| 4.0 | 31.70 | 28.20 | 22.80 | 25.50 | 26.50 | 25.00 | 16.20 | 24.10 | 25.30 | 25.00 | 17.70 | 23.10 | 25.00 | 15.70 | 4.0 |
| 4.5 | 25.70 | 23.10 | 21.70 | 21.00 | 22.00 | 23.80 | 15.20 | 20.10 | 21.20 | 23.40 | 16.60 | 19.50 | 21.90 | 14.70 | 4.5 |
| 5.0 | 20.60 | 19.40 | 20.60 | 17.70 | 18.60 | 21.10 | 14.40 | 17.10 | 18.10 | 20.20 | 15.70 | 16.70 | 19.00 | 13.90 | 5.0 |
| 5.5 | 16.90 | 16.50 | 18.50 | 15.10 | 15.90 | 18.40 | 13.60 | 14.70 | 15.60 | 17.60 | 14.80 | 14.40 | 16.60 | 13.10 | 5.5 |
| 6.0 | 14.20 | 13.90 | 15.70 | 13.10 | 13.80 | 16.10 | 12.90 | 12.70 | 13.70 | 15.60 | 14.10 | 12.60 | 14.80 | 12.40 | 6.0 |
| 6.5 | 12.20 | 11.90 | 13.50 | 11.40 | 12.10 | 14.20 | 12.30 | 11.10 | 12.10 | 13.90 | 13.40 | 11.10 | 13.20 | 11.80 | 6.5 |
| 7.0 | 10.50 | 10.20 | 11.80 | 9.95 | 10.60 | 12.50 | 11.70 | 9.85 | 10.70 | 12.50 | 12.70 | 9.90 | 11.80 | 11.20 | 7.0 |
| 8.0 | | 7.75 | 9.20 | 7.50 | 8.10 | 9.85 | 9.85 | 7.75 | 8.55 | 10.00 | 10.40 | 7.90 | 9.75 | 10.20 | 8.0 |
| 9.0 | | 6.00 | 7.40 | 5.75 | 6.30 | 7.95 | 7.95 | 6.05 | 6.75 | 8.15 | 8.50 | 6.35 | 8.05 | 8.65 | 9.0 |
| 10.0 | | 4.70 | 6.00 | 4.45 | 5.00 | 6.55 | 6.55 | 4.75 | 5.40 | 6.70 | 7.10 | 5.15 | 6.65 | 7.20 | 10.0 |
| 11.0 | | | | 3.45 | 3.95 | 5.50 | 5.50 | 3.75 | 4.35 | 5.65 | 5.95 | 4.10 | 5.55 | 6.10 | 11.0 |
| 12.0 | | | | 2.65 | 3.15 | 4.60 | 4.65 | 2.90 | 3.50 | 4.75 | 5.10 | 3.30 | 4.65 | 5.20 | 12.0 |
| 14.0 | | | | 1.45 | 1.95 | 3.35 | 3.35 | 1.70 | 2.30 | 3.45 | 3.80 | 2.05 | 3.35 | 3.85 | 14.0 |
| 16.0 | | | | | | | | | 1.40 | 2.55 | 2.85 | 1.15 | 2.45 | 2.95 | 16.0 |
| 18.0 | | | | | | | | | | | | | 1.80 | 2.25 | 18.0 |
| 20.0 | | | | | | | | | | | | | 1.25 | 1.70 | 20.0 |
| 21.0 | | | | | | | | | | | | | 1.05 | 1.50 | 21.0 |
| 22.0 | | | | | | | | | | | | | | | 22.0 |
| 24.0 | | | | | | | | | | | | | | | 24.0 |
| 26.0 | | | | | | | | | | | | | | | 26.0 |
| 28.0 | | | | | | | | | | | | | | | 28.0 |
| 30.0 | | | | | | | | | | | | | | | 30.0 |
| 31.0 | | | | | | | | | | | | | | | 31.0 |
| 32.0 | | | | | | | | | | | | | | | 32.0 |
| 34.0 | | | | | | | | | | | | | | | 34.0 |
| 35.0 | | | | | | | | | | | | | | | 35.0 |
| 36.0 | | | | | | | | | | | | | | | 36.0 |
| 38.0 | | | | | | | | | | | | | | | 38.0 |
| 40.0 | | | | | | | | | | | | | | | 40.0 |
| 42.0 | | | | | | | | | | | | | | | 42.0 |
| 44.0 | | | | | | | | | | | | | | | 44.0 |
| 1 | 0 | 46 | 0 | 92 | 46 | 0 | 0 | 92 | 46 | 0 | 0 | 92 | 0 | 0 | 1 |
| 2 | 0 | 0 | 0 | 0 | 46 | 0 | 0 | 46 | 46 | 0 | 0 | 46 | 46 | 0 | 2 |
| 3 | 0 | 0 | 0 | 0 | 0 | 0 | 0 | 0 | 46 | 46 | 0 | 46 | 46 | 0 | 3 |
| 4 | 0 | 0 | 0 | 0 | 0 | 46 | 0 | 0 | 0 | 46 | 46 | 0 | 46 | 92 | 4 |
| 5 | 0 | 0 | 46 | 0 | 0 | 46 | 92 | 0 | 0 | 46 | 92 | 0 | 46 | 92 | 5 |
| ID | 1 | 23 | 2 | 24 | 25 | 12 | 3 | 26 | 27 | 13 | 4 | 28 | 14 | 5 | ID |
| t | 20.7 | 24.3 | 19.9 | 20.5 | 24.0 | 19.1 | 17.8 | 20.6 | 23.6 | 18.0 | 18.8 | 20.5 | 24.2 | 17.3 | t |
| [DEG] | 0～84 | 0～84 | 0～84 | 0～84 | 0～84 | 0～84 | 0～84 | 29～84 | 0～84 | 0～84 | 0～84 | 32～84 | 0～84 | 0～84 | [DEG] |
| | 20 | 9 | 5 | 9 | 8 | 5 | 5 | 8 | 8 | 5 | 5 | 7 | 5 | 4 | |
| | 重荷重装置 | 50t | 35t | 50t | 50t | 35t | 35t | 50t | 50t | 35t | 35t | 50t | 35t | 35t | |

| m | 27.7 | 27.7 | 27.7 | 31.2 | 31.2 | 31.2 | 34.7 | 34.7 | 34.7 | 38.2 | 38.2 | 41.7 | 41.7 | 45.2 | 48.0 | m |
|---|---|---|---|---|---|---|---|---|---|---|---|---|---|---|---|---|
| 1.6 | | | | | | | | | | | | | | | | 1.6 |
| 2.0 | | | | | | | | | | | | | | | | 2.0 |
| 2.5 | 25.00 | 25.00 | 18.40 | | | | | | | | | | | | | 2.5 |
| 3.0 | 25.00 | 25.00 | 17.60 | 20.00 | 20.00 | 16.70 | | | | | | | | | | 3.0 |
| 3.5 | 25.00 | 25.00 | 16.90 | 20.00 | 19.80 | 16.10 | 18.40 | 15.00 | 14.70 | | | | | | | 3.5 |
| 4.0 | 22.40 | 23.70 | 16.20 | 20.00 | 19.20 | 15.60 | 18.40 | 15.00 | 14.70 | 15.00 | 12.50 | | | | | 4.0 |
| 4.5 | 19.10 | 20.30 | 15.60 | 18.70 | 18.60 | 15.10 | 17.80 | 14.90 | 14.40 | 15.00 | 12.50 | | | | | 4.5 |
| 5.0 | 16.50 | 17.60 | 14.80 | 16.30 | 17.30 | 14.60 | 15.50 | 14.50 | 14.10 | 15.00 | 12.50 | 12.10 | 11.00 | | | 5.0 |
| 5.5 | 14.40 | 15.50 | 14.00 | 14.40 | 15.30 | 14.20 | 13.70 | 14.20 | 13.70 | 13.30 | 12.50 | 12.10 | 11.00 | 9.70 | 7.50 | 5.5 |
| 6.0 | 12.70 | 13.70 | 13.30 | 12.70 | 13.70 | 13.60 | 12.20 | 13.40 | 13.40 | 11.90 | 12.50 | 11.70 | 11.00 | 9.70 | 7.50 | 6.0 |
| 6.5 | 11.20 | 12.30 | 12.70 | 11.40 | 12.30 | 13.00 | 10.90 | 12.10 | 12.50 | 10.70 | 11.80 | 10.50 | 11.00 | 9.70 | 7.50 | 6.5 |
| 7.0 | 10.00 | 11.00 | 12.10 | 10.20 | 11.10 | 11.70 | 9.85 | 10.90 | 11.30 | 9.65 | 10.70 | 9.55 | 10.20 | 9.55 | 7.50 | 7.0 |
| 8.0 | 8.10 | 9.05 | 10.30 | 8.40 | 9.20 | 9.85 | 8.05 | 9.15 | 9.50 | 7.95 | 9.00 | 7.95 | 8.55 | 7.95 | 7.50 | 8.0 |
| 9.0 | 6.65 | 7.55 | 8.70 | 6.95 | 7.75 | 8.35 | 6.70 | 7.75 | 8.10 | 6.65 | 7.60 | 6.65 | 7.25 | 6.75 | 6.60 | 9.0 |
| 10.0 | 5.45 | 6.35 | 7.35 | 5.80 | 6.55 | 7.15 | 5.60 | 6.60 | 6.95 | 5.55 | 6.55 | 5.60 | 6.20 | 5.75 | 5.60 | 10.0 |
| 11.0 | 4.50 | 5.30 | 6.20 | 4.85 | 5.60 | 6.15 | 4.70 | 5.70 | 6.00 | 4.70 | 5.65 | 4.80 | 5.35 | 4.90 | 4.80 | 11.0 |
| 12.0 | 3.70 | 4.40 | 5.35 | 4.10 | 4.80 | 5.25 | 3.95 | 4.90 | 5.25 | 3.95 | 4.90 | 4.05 | 4.60 | 4.20 | 4.15 | 12.0 |
| 14.0 | 2.45 | 3.15 | 4.00 | 2.90 | 3.45 | 3.90 | 2.80 | 3.65 | 3.90 | 2.85 | 3.70 | 2.95 | 3.50 | 3.10 | 3.05 | 14.0 |
| 16.0 | 1.60 | 2.20 | 3.05 | 2.00 | 2.55 | 2.95 | 1.90 | 2.75 | 2.95 | 1.95 | 2.80 | 2.10 | 2.60 | 2.30 | 2.25 | 16.0 |
| 18.0 | 0.85 | 1.55 | 2.35 | 1.30 | 1.85 | 2.25 | 1.20 | 2.05 | 2.25 | 1.30 | 2.10 | 1.45 | 1.95 | 1.65 | 1.60 | 18.0 |
| 20.0 | | 1.00 | 1.80 | | 1.30 | 1.70 | | 1.50 | 1.70 | | 1.55 | | 1.40 | 1.10 | | 20.0 |
| 21.0 | | 0.75 | 1.60 | | 1.10 | 1.50 | | 1.25 | 1.50 | | 1.35 | | 1.20 | | | 21.0 |
| 22.0 | | 0.55 | 1.40 | | 0.85 | 1.30 | | 1.05 | 1.30 | | 1.10 | | 1.00 | | | 22.0 |
| 24.0 | | | 1.05 | | | 0.90 | | | 0.90 | | | | | | | 24.0 |
| 26.0 | | | | | | 0.60 | | | 0.60 | | | | | | | 26.0 |
| 28.0 | | | | | | | | | | | | | | | | 28.0 |
| 30.0 | | | | | | | | | | | | | | | | 30.0 |
| 31.0 | | | | | | | | | | | | | | | | 31.0 |
| 32.0 | | | | | | | | | | | | | | | | 32.0 |
| 34.0 | | | | | | | | | | | | | | | | 34.0 |
| 35.0 | | | | | | | | | | | | | | | | 35.0 |
| 36.0 | | | | | | | | | | | | | | | | 36.0 |
| 38.0 | | | | | | | | | | | | | | | | 38.0 |
| 40.0 | | | | | | | | | | | | | | | | 40.0 |
| 42.0 | | | | | | | | | | | | | | | | 42.0 |
| 44.0 | | | | | | | | | | | | | | | | 44.0 |
| 1 | 92 | 46 | 0 | 92 | 46 | 0 | 92 | 46 | 0 | 92 | 0 | 92 | 46 | 92 | 100 | 1 |
| 2 | 46 | 46 | 0 | 46 | 46 | 0 | 92 | 46 | 46 | 92 | 92 | 92 | 92 | 92 | 100 | 2 |
| 3 | 46 | 46 | 46 | 46 | 46 | 92 | 46 | 46 | 92 | 92 | 92 | 92 | 92 | 92 | 100 | 3 |
| 4 | 46 | 46 | 92 | 46 | 46 | 92 | 46 | 92 | 92 | 46 | 92 | 92 | 92 | 92 | 100 | 4 |
| 5 | 0 | 46 | 92 | 46 | 92 | 92 | 46 | 92 | 92 | 46 | 92 | 46 | 92 | 92 | 100 | 5 |
| ID | 29 | 15 | 6 | 16 | 17 | 7 | 19 | 18 | 8 | 20 | 9 | 21 | 10 | 11 | 22 | ID |
| t | 20.1 | 22.2 | 17.0 | 20.0 | 20.0 | 16.7 | 18.4 | 15.0 | 14.7 | 15.0 | 12.5 | 12.1 | 11.0 | 9.7 | 7.5 | t |
| [DEG] | 36～84 | 22～84 | 0～84 | 39～84 | 36～84 | 0～84 | 48～84 | 33～84 | 34～84 | 53～84 | 40～84 | 56～84 | 48～84 | 58～84 | 62～84 | [DEG] |
| | 5 | 5 | 4 | 4 | 4 | 4 | 4 | 3 | 3 | 3 | 3 | 3 | 3 | 3 | 3 | |
| | 35t | 35t | 35t | 35t | 35t | 35t | 35t | 35t | 35t | 35t | 35t | 35t | 35t | 35t | 35t | |

# ブーム

| MB | | 0.0 t | 2.36 m | 360 ° | JPN |
|---|---|---|---|---|---|

| m | 10.2 | 13.7 | 13.7 | 17.2 | 17.2 | 17.2 | 17.2 | 20.7 | 20.7 | 20.7 | 20.7 | 24.2 | 24.2 | 24.2 | m |
|---|---|---|---|---|---|---|---|---|---|---|---|---|---|---|---|
| | | | | | | | | | | | | | | | |
| 1.6 | 54.30 | | | | | | | | | | | | | | 1.6 |
| 2.0 | 38.00 | 32.60 | 25.00 | 28.50 | 29.60 | 25.00 | 21.60 | 26.10 | 27.40 | 25.00 | 23.00 | 24.40 | 25.00 | 19.90 | 2.0 |
| 2.5 | 27.00 | 23.70 | 25.00 | 21.10 | 22.10 | 25.00 | 19.90 | 19.80 | 20.90 | 23.30 | 21.40 | 18.80 | 21.40 | 18.90 | 2.5 |
| 3.0 | 20.40 | 18.20 | 20.50 | 16.30 | 17.20 | 19.90 | 18.50 | 15.50 | 16.60 | 18.70 | 19.40 | 15.00 | 17.40 | 17.90 | 3.0 |
| 3.5 | 16.10 | 14.40 | 16.50 | 13.00 | 13.80 | 16.30 | 16.30 | 12.50 | 13.50 | 15.50 | 16.10 | 12.30 | 14.50 | 15.30 | 3.5 |
| 4.0 | 12.90 | 11.70 | 13.60 | 10.60 | 11.30 | 13.60 | 13.60 | 10.30 | 11.20 | 13.10 | 13.60 | 10.20 | 12.30 | 13.10 | 4.0 |
| 4.5 | 10.30 | 9.65 | 11.50 | 8.70 | 9.40 | 11.60 | 11.60 | 8.55 | 9.45 | 11.20 | 11.70 | 8.55 | 10.50 | 11.30 | 4.5 |
| 5.0 | 8.40 | 8.00 | 9.75 | 7.20 | 7.90 | 10.00 | 10.00 | 7.15 | 8.00 | 9.75 | 10.20 | 7.25 | 9.15 | 9.90 | 5.0 |
| 5.5 | 6.95 | 6.70 | 8.25 | 6.00 | 6.65 | 8.70 | 8.70 | 6.00 | 6.85 | 8.50 | 8.95 | 6.15 | 8.00 | 8.70 | 5.5 |
| 6.0 | 5.80 | 5.55 | 7.00 | 5.00 | 5.65 | 7.60 | 7.65 | 5.05 | 5.85 | 7.45 | 7.95 | 5.25 | 7.05 | 7.75 | 6.0 |
| 6.5 | 4.90 | 4.65 | 6.00 | 4.15 | 4.80 | 6.60 | 6.60 | 4.25 | 5.05 | 6.60 | 7.05 | 4.45 | 6.25 | 6.90 | 6.5 |
| 7.0 | 4.15 | 3.85 | 5.20 | 3.45 | 4.05 | 5.75 | 5.80 | 3.55 | 4.30 | 5.85 | 6.30 | 3.80 | 5.55 | 6.20 | 7.0 |
| 8.0 | | 2.65 | 3.90 | 2.30 | 2.90 | 4.45 | 4.45 | 2.45 | 3.20 | 4.60 | 4.95 | 2.70 | 4.40 | 5.00 | 8.0 |
| 9.0 | | 1.75 | 2.95 | | 1.95 | 3.50 | 3.50 | | 2.30 | 3.65 | 3.95 | 1.85 | 3.50 | 4.05 | 9.0 |
| 10.0 | | 1.05 | 2.25 | | 1.25 | 2.75 | 2.75 | | | 2.90 | 3.20 | | 2.80 | 3.30 | 10.0 |
| 11.0 | | | | | | 2.15 | 2.15 | | | 2.30 | 2.60 | | 2.20 | 2.70 | 11.0 |
| 12.0 | | | | | | 1.65 | 1.65 | | | 1.80 | 2.10 | | 1.70 | 2.20 | 12.0 |
| 14.0 | | | | | | 0.95 | 0.95 | | | 1.05 | 1.35 | | 0.95 | 1.45 | 14.0 |
| 16.0 | | | | | | | | | | 0.50 | 0.80 | | | 0.90 | 16.0 |
| 18.0 | | | | | | | | | | | | | | | 18.0 |
| 20.0 | | | | | | | | | | | | | | | 20.0 |
| 21.0 | | | | | | | | | | | | | | | 21.0 |
| 22.0 | | | | | | | | | | | | | | | 22.0 |
| 24.0 | | | | | | | | | | | | | | | 24.0 |
| 26.0 | | | | | | | | | | | | | | | 26.0 |
| 28.0 | | | | | | | | | | | | | | | 28.0 |
| 30.0 | | | | | | | | | | | | | | | 30.0 |
| 31.0 | | | | | | | | | | | | | | | 31.0 |
| 32.0 | | | | | | | | | | | | | | | 32.0 |
| 34.0 | | | | | | | | | | | | | | | 34.0 |
| 35.0 | | | | | | | | | | | | | | | 35.0 |
| 36.0 | | | | | | | | | | | | | | | 36.0 |
| 38.0 | | | | | | | | | | | | | | | 38.0 |
| 40.0 | | | | | | | | | | | | | | | 40.0 |
| 42.0 | | | | | | | | | | | | | | | 42.0 |
| 44.0 | | | | | | | | | | | | | | | 44.0 |
| 1 | 0 | 46 | 0 | 92 | 46 | 0 | 0 | 92 | 46 | 0 | 0 | 92 | 0 | 0 | 1 |
| 2 | 0 | 0 | 0 | 0 | 46 | 0 | 0 | 46 | 46 | 0 | 0 | 46 | 46 | 0 | 2 |
| 3 | 0 | 0 | 0 | 0 | 0 | 0 | 0 | 0 | 46 | 46 | 0 | 46 | 46 | 0 | 3 |
| 4 | 0 | 0 | 0 | 0 | 0 | 46 | 0 | 0 | 0 | 46 | 46 | 0 | 46 | 92 | 4 |
| 5 | 0 | 0 | 46 | 0 | 0 | 46 | 92 | 0 | 0 | 46 | 92 | 0 | 46 | 92 | 5 |
| ID | 1 | 23 | 2 | 24 | 25 | 12 | 3 | 26 | 27 | 13 | 4 | 28 | 14 | 5 | ID |
| t | 20.7 | 24.3 | 19.9 | 20.5 | 24.0 | 19.1 | 17.8 | 20.6 | 23.6 | 18.0 | 18.8 | 20.5 | 24.2 | 17.3 | t |
| [DEG] | 0～84 | 0～84 | 0～84 | 41～84 | 35～84 | 0～84 | 0～84 | 52～84 | 44～84 | 12～84 | 0～84 | 57～84 | 37～84 | 35～84 | [DEG] |
| | 20 | 9 | 5 | 9 | 8 | 5 | 5 | 8 | 8 | 5 | 5 | 7 | 5 | 4 | |
| | 重荷重装置 | 50t | 35t | 50t | 50t | 35t | 35t | 50t | 50t | 35t | 35t | 50t | 35t | 35t | |

| m | 27.7 | 27.7 | 27.7 | 31.2 | 31.2 | 31.2 | 34.7 | 34.7 | 34.7 | 38.2 | 38.2 | 41.7 | 41.7 | 45.2 | 48.0 | m |
|---|---|---|---|---|---|---|---|---|---|---|---|---|---|---|---|---|
| | | | | | | | | | | | | | | | | |
| 1.6 | | | | | | | | | | | | | | | | 1.6 |
| 2.0 | | | | | | | | | | | | | | | | 2.0 |
| 2.5 | 18.20 | 19.40 | 18.40 | | | | | | | | | | | | | 2.5 |
| 3.0 | 14.70 | 15.90 | 17.40 | 14.50 | 15.50 | 16.30 | | | | | | | | | | 3.0 |
| 3.5 | 12.20 | 13.30 | 14.70 | 12.10 | 13.10 | 13.80 | 11.50 | 12.70 | 13.10 | | | | | | | 3.5 |
| 4.0 | 10.20 | 11.30 | 12.60 | 10.30 | 11.20 | 11.90 | 9.80 | 11.00 | 11.30 | 9.50 | 10.60 | | | | | 4.0 |
| 4.5 | 8.70 | 9.70 | 11.00 | 8.85 | 9.75 | 10.40 | 8.45 | 9.55 | 9.95 | 8.20 | 9.30 | | | | | 4.5 |
| 5.0 | 7.45 | 8.40 | 9.65 | 7.65 | 8.50 | 9.15 | 7.30 | 8.40 | 8.75 | 7.15 | 8.20 | 7.10 | 7.70 | | | 5.0 |
| 5.5 | 6.40 | 7.35 | 8.55 | 6.65 | 7.50 | 8.10 | 6.35 | 7.45 | 7.80 | 6.25 | 7.30 | 6.25 | 6.85 | 6.30 | 6.10 | 5.5 |
| 6.0 | 5.55 | 6.45 | 7.60 | 5.80 | 6.65 | 7.25 | 5.55 | 6.60 | 6.95 | 5.50 | 6.50 | 5.50 | 6.10 | 5.60 | 5.45 | 6.0 |
| 6.5 | 4.80 | 5.70 | 6.85 | 5.10 | 5.90 | 6.50 | 4.90 | 5.90 | 6.25 | 4.85 | 5.80 | 4.85 | 5.45 | 4.95 | 4.85 | 6.5 |
| 7.0 | 4.15 | 5.00 | 6.15 | 4.45 | 5.25 | 5.85 | 4.30 | 5.30 | 5.60 | 4.25 | 5.20 | 4.30 | 4.90 | 4.45 | 4.30 | 7.0 |
| 8.0 | 3.10 | 3.95 | 5.00 | 3.45 | 4.20 | 4.75 | 3.30 | 4.25 | 4.60 | 3.30 | 4.25 | 3.40 | 3.95 | 3.55 | 3.45 | 8.0 |
| 9.0 | 2.25 | 3.10 | 4.15 | 2.65 | 3.35 | 3.90 | 2.50 | 3.45 | 3.75 | 2.55 | 3.45 | 2.65 | 3.20 | 2.80 | 2.75 | 9.0 |
| 10.0 | 1.60 | 2.40 | 3.45 | 1.95 | 2.70 | 3.20 | 1.90 | 2.80 | 3.10 | 1.95 | 2.80 | 2.05 | 2.60 | 2.25 | 2.15 | 10.0 |
| 11.0 | | 1.85 | 2.80 | | 2.15 | 2.65 | | 2.25 | 2.55 | | 2.30 | | 2.05 | 1.75 | | 11.0 |
| 12.0 | | 1.35 | 2.30 | | 1.65 | 2.20 | | 1.80 | 2.10 | | 1.85 | | 1.65 | | | 12.0 |
| 14.0 | | | 1.55 | | | 1.45 | | | 1.35 | | | | | | | 14.0 |
| 16.0 | | | 1.00 | | | | | | | | | | | | | 16.0 |
| 18.0 | | | | | | | | | | | | | | | | 18.0 |
| 20.0 | | | | | | | | | | | | | | | | 20.0 |
| 21.0 | | | | | | | | | | | | | | | | 21.0 |
| 22.0 | | | | | | | | | | | | | | | | 22.0 |
| 24.0 | | | | | | | | | | | | | | | | 24.0 |
| 26.0 | | | | | | | | | | | | | | | | 26.0 |
| 28.0 | | | | | | | | | | | | | | | | 28.0 |
| 30.0 | | | | | | | | | | | | | | | | 30.0 |
| 31.0 | | | | | | | | | | | | | | | | 31.0 |
| 32.0 | | | | | | | | | | | | | | | | 32.0 |
| 34.0 | | | | | | | | | | | | | | | | 34.0 |
| 35.0 | | | | | | | | | | | | | | | | 35.0 |
| 36.0 | | | | | | | | | | | | | | | | 36.0 |
| 38.0 | | | | | | | | | | | | | | | | 38.0 |
| 40.0 | | | | | | | | | | | | | | | | 40.0 |
| 42.0 | | | | | | | | | | | | | | | | 42.0 |
| 44.0 | | | | | | | | | | | | | | | | 44.0 |
| 1 | 92 | 46 | 0 | 92 | 46 | 0 | 92 | 46 | 0 | 92 | 0 | 92 | 46 | 92 | 100 | 1 |
| 2 | 46 | 46 | 0 | 46 | 46 | 0 | 92 | 46 | 46 | 92 | 92 | 92 | 92 | 92 | 100 | 2 |
| 3 | 46 | 46 | 46 | 46 | 46 | 92 | 46 | 46 | 92 | 92 | 92 | 92 | 92 | 92 | 100 | 3 |
| 4 | 46 | 46 | 92 | 46 | 46 | 92 | 46 | 92 | 92 | 46 | 92 | 92 | 92 | 92 | 100 | 4 |
| 5 | 0 | 46 | 92 | 46 | 92 | 92 | 46 | 92 | 92 | 46 | 92 | 46 | 92 | 92 | 100 | 5 |
| ID | 29 | 15 | 6 | 16 | 17 | 7 | 19 | 18 | 8 | 20 | 9 | 21 | 10 | 11 | 22 | ID |
| t | 18.2 | 19.4 | 17.0 | 14.5 | 15.5 | 16.3 | 11.5 | 12.7 | 13.1 | 9.5 | 10.6 | 7.1 | 7.7 | 6.3 | 6.1 | t |
| [DEG] | 61～84 | 52～84 | 37～84 | 62～84 | 55～84 | 47～84 | 67～84 | 58～84 | 54～84 | 70～84 | 63～84 | 72～84 | 68～84 | 73～84 | 75～84 | [DEG] |
| | 5 | 5 | 4 | 4 | 4 | 4 | 4 | 3 | 3 | 3 | 3 | 3 | 3 | 3 | 3 | |
| | 35t | 35t | 35t | 35t | 35t | 35t | 35t | 35t | 35t | 35t | 35t | 35t | 35t | 35t | 35t | |

MB | 4.0 t

アウトリガ不使用
静止

前方 | JPN

| m | 10.2 |
|---|---|
| 3.0 | |
| 3.5 | |
| 4.0 | |
| 4.5 | |
| 5.0 | |
| 5.5 | |
| 6.0 | 2.00 |
| 6.5 | 2.00 |
| 7.0 | 2.00 |
| 8.0 | |
| 9.0 | |
| 10.0 | |
| 11.0 | |
| 12.0 | |
| 13.0 | |
| 14.0 | |
| 1 | 0 |
| 2 | 0 |
| 3 | 0 |
| 4 | 0 |
| 5 | 0 |
| ID | 1 |
| t | 2.0 |
| [DEG] | 0～40 |
| | 3 |
| | 35t |

MB | 4.0 t

アウトリガ不使用
走行（1.6km/h以下）

前方 | JPN

| m | 10.2 |
|---|---|
| 3.0 | |
| 3.5 | |
| 4.0 | |
| 4.5 | |
| 5.0 | |
| 5.5 | |
| 6.0 | 2.00 |
| 6.5 | 2.00 |
| 7.0 | 2.00 |
| 8.0 | |
| 9.0 | |
| 10.0 | |
| 11.0 | |
| 12.0 | |
| 13.0 | |
| 14.0 | |
| 1 | 0 |
| 2 | 0 |
| 3 | 0 |
| 4 | 0 |
| 5 | 0 |
| ID | 1 |
| t | 2.0 |
| [DEG] | 0～40 |
| | 3 |
| | 35t |

MB | 4.0 t

アウトリガ不使用
静止

360 ° | JPN

| m | 10.2 |
|---|---|
| 3.0 | |
| 3.5 | |
| 4.0 | |
| 4.5 | |
| 5.0 | |
| 5.5 | |
| 6.0 | 2.00 |
| 6.5 | 1.85 |
| 7.0 | 1.35 |
| 8.0 | |
| 9.0 | |
| 10.0 | |
| 11.0 | |
| 12.0 | |
| 13.0 | |
| 14.0 | |
| 1 | 0 |
| 2 | 0 |
| 3 | 0 |
| 4 | 0 |
| 5 | 0 |
| ID | 1 |
| t | 2.0 |
| [DEG] | 22～40 |
| | 3 |
| | 35t |

MB | 4.0 t

アウトリガ不使用
走行（1.6km/h以下）

360 ° | JPN

| m | 10.2 |
|---|---|
| 3.0 | |
| 3.5 | |
| 4.0 | |
| 4.5 | |
| 5.0 | |
| 5.5 | |
| 6.0 | 2.00 |
| 6.5 | 1.55 |
| 7.0 | 1.15 |
| 8.0 | |
| 9.0 | |
| 10.0 | |
| 11.0 | |
| 12.0 | |
| 13.0 | |
| 14.0 | |
| 1 | 0 |
| 2 | 0 |
| 3 | 0 |
| 4 | 0 |
| 5 | 0 |
| ID | 1 |
| t | 2.0 |
| [DEG] | 22～40 |
| | 3 |
| | 35t |

MB | 0.0 t

アウトリガ不使用
静止

前方 | JPN

| m | 10.2 | 13.7 | 17.2 |
|---|---|---|---|
| 3.0 | 12.80 | 13.60 | 14.00 |
| 3.5 | 11.10 | 11.90 | 12.40 |
| 4.0 | 9.75 | 10.50 | 11.00 |
| 4.5 | 8.60 | 9.40 | 9.90 |
| 5.0 | 7.60 | 8.40 | 8.90 |
| 5.5 | 6.70 | 7.55 | 8.00 |
| 6.0 | 5.95 | 6.80 | 7.25 |
| 6.5 | 5.30 | 6.10 | 6.60 |
| 7.0 | 4.70 | 5.55 | 6.00 |
| 8.0 | | 4.55 | 5.00 |
| 9.0 | | 3.70 | 4.20 |
| 10.0 | | 3.05 | 3.50 |
| 11.0 | | | 2.95 |
| 12.0 | | | 2.45 |
| 13.0 | | | 2.05 |
| 14.0 | | | 1.65 |
| 1 | 0 | 0 | 0 |
| 2 | 0 | 0 | 0 |
| 3 | 0 | 0 | 0 |
| 4 | 0 | 0 | 0 |
| 5 | 0 | 46 | 92 |
| ID | 1 | 2 | 3 |
| t | 12.8 | 13.6 | 14.0 |
| [DEG] | 0～80 | 0～80 | 0～80 |
| | 3 | 3 | 3 |
| | 35t | 35t | 35t |

MB | 0.0 t

アウトリガ不使用
走行（1.6km/h以下）

前方 | JPN

| m | 10.2 | 13.7 | 17.2 |
|---|---|---|---|
| 3.0 | 10.90 | 11.50 | 11.90 |
| 3.5 | 9.45 | 10.10 | 10.50 |
| 4.0 | 8.30 | 9.00 | 9.40 |
| 4.5 | 7.30 | 8.00 | 8.40 |
| 5.0 | 6.45 | 7.15 | 7.55 |
| 5.5 | 5.70 | 6.40 | 6.80 |
| 6.0 | 5.05 | 5.75 | 6.15 |
| 6.5 | 4.50 | 5.20 | 5.60 |
| 7.0 | 4.00 | 4.70 | 5.10 |
| 8.0 | | 3.85 | 4.25 |
| 9.0 | | 3.15 | 3.55 |
| 10.0 | | 2.60 | 3.00 |
| 11.0 | | | 2.50 |
| 12.0 | | | 2.10 |
| 13.0 | | | 1.70 |
| 14.0 | | | 1.40 |
| 1 | 0 | 0 | 0 |
| 2 | 0 | 0 | 0 |
| 3 | 0 | 0 | 0 |
| 4 | 0 | 0 | 0 |
| 5 | 0 | 46 | 92 |
| ID | 1 | 2 | 3 |
| t | 10.9 | 11.5 | 11.9 |
| [DEG] | 0～80 | 0～80 | 0～80 |
| | 3 | 3 | 3 |
| | 35t | 35t | 35t |

MB | 0.0 t

アウトリガ不使用
静止

360 ° | JPN

| m | 10.2 | 13.7 | 17.2 |
|---|---|---|---|
| 3.0 | 5.50 | | |
| 3.5 | 4.25 | 5.30 | |
| 4.0 | 3.30 | 4.30 | |
| 4.5 | 2.50 | 3.45 | |
| 5.0 | 1.80 | 2.80 | 3.40 |
| 5.5 | 1.25 | 2.20 | 2.80 |
| 6.0 | 0.75 | 1.75 | 2.30 |
| 6.5 | | 1.30 | 1.90 |
| 7.0 | | 0.95 | 1.50 |
| 8.0 | | | 0.90 |
| 9.0 | | | |
| 10.0 | | | |
| 11.0 | | | |
| 12.0 | | | |
| 13.0 | | | |
| 14.0 | | | |
| 1 | 0 | 0 | 0 |
| 2 | 0 | 0 | 0 |
| 3 | 0 | 0 | 0 |
| 4 | 0 | 0 | 0 |
| 5 | 0 | 46 | 92 |
| ID | 1 | 2 | 3 |
| t | 5.50 | 5.30 | 3.40 |
| [DEG] | 35～65 | 48～70 | 55～70 |
| | 3 | 3 | 3 |
| | 35t | 35t | 35t |

MB | 0.0 t

アウトリガ不使用
走行（1.6km/h以下）

360 ° | JPN

| m | 10.2 | 13.7 | 17.2 |
|---|---|---|---|
| 3.0 | 4.65 | | |
| 3.5 | 3.60 | 4.50 | |
| 4.0 | 2.80 | 3.65 | |
| 4.5 | 2.10 | 2.95 | |
| 5.0 | 1.55 | 2.35 | 2.85 |
| 5.5 | 1.05 | 1.90 | 2.40 |
| 6.0 | 0.65 | 1.45 | 1.95 |
| 6.5 | | 1.10 | 1.60 |
| 7.0 | | 0.80 | 1.30 |
| 8.0 | | | 0.75 |
| 9.0 | | | |
| 10.0 | | | |
| 11.0 | | | |
| 12.0 | | | |
| 13.0 | | | |
| 14.0 | | | |
| 1 | 0 | 0 | 0 |
| 2 | 0 | 0 | 0 |
| 3 | 0 | 0 | 0 |
| 4 | 0 | 0 | 0 |
| 5 | 0 | 46 | 92 |
| ID | 1 | 2 | 3 |
| t | 4.65 | 4.50 | 2.85 |
| [DEG] | 37～65 | 49～70 | 55～70 |
| | 3 | 3 | 3 |
| | 35t | 35t | 35t |

ラフテレーンクレーン

# GR-1000N-1

## フルオートジブ

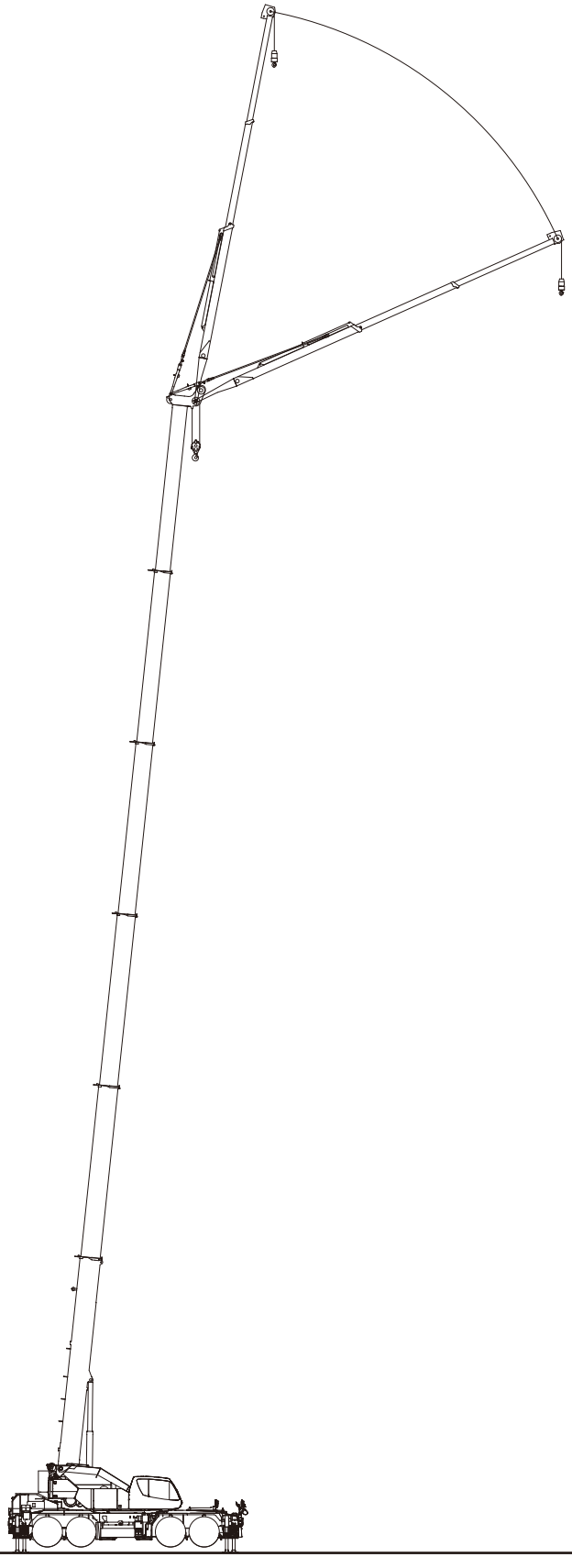

# フルオートジブ定格総荷重表

## ■定格総荷重表注意事項

1. 定格総荷重は、水平堅土上においてクレーンを水平に設置した状態での値で、つり具と補巻フック質量（110kg）を含んだ値です。
   太線より上はクレーンの強度により定められ、下はクレーンの安定度によって定められています。
2. 作業半径は、ブームおよびジブのたわみを含んだ実際の値に基づいていますので、必ず作業半径を基準にしてください。
3. 高速巻き下げは、フックのみを降下するときに使用してください。また、急激なレバー操作は避けてください。
4. ジブ使用時の補巻フックのワイヤロープ巻掛本数は1本です。主巻フックは35tフックを使用し、3本掛けとしてください。
5. 側方域でのつり上げ性能は、アウトリガ張出幅によって異なります。張出幅に応じた性能で作業をしてください。
   また、前方･後方域でのつり上げ性能は「アウトリガ最大張出」の定格総荷重ですが、フロントアウトリガ張出幅とリヤアウトリガ張出幅の組み合わせによってその前方･後方域の範囲（角度a、b）が異なります。

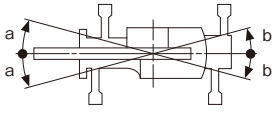


| 前方域 | | | | | | | | | |
|---|---|---|---|---|---|---|---|---|---|
| 角度 a° | | | フロントアウトリガ張出状態 | | | | | | |
| | | | 最大張出 | 中間張出 | | | | | 最小張出 |
| | | | 7.8m | 7.6m | 7.2m | 6.4m | 5.38m | 4.18m | 2.36m |
| リヤアウトリガ張出状態 | 最大張出 | 7.8m | 90 | 75 | 65 | 55 | 40 | 10 | 5 |
| | 中間張出 | 7.6m | 75 | 70 | 65 | 50 | 40 | 10 | 5 |
| | | 7.2m | 65 | 65 | 60 | 50 | 20 | 10 | 5 |
| | | 6.4m | 60 | 55 | 55 | 45 | 15 | 10 | 5 |
| | | 5.38m | 50 | 50 | 45 | 25 | 15 | 10 | 5 |
| | | 4.18m | 45 | 45 | 25 | 20 | 15 | 5 | 5 |
| | 最小張出 | 2.36m | 25 | 20 | 20 | 15 | 10 | 5 | 5 |

| 後方域 | | | | | | | | | |
|---|---|---|---|---|---|---|---|---|---|
| 角度 b° | | | フロントアウトリガ張出状態 | | | | | | |
| | | | 最大張出 | 中間張出 | | | | | 最小張出 |
| | | | 7.8m | 7.6m | 7.2m | 6.4m | 5.38m | 4.18m | 2.36m |
| リヤアウトリガ張出状態 | 最大張出 | 7.8m | 90 | 75 | 70 | 30 | 25 | 20 | 15 |
| | 中間張出 | 7.6m | 75 | 70 | 35 | 25 | 25 | 20 | 15 |
| | | 7.2m | 30 | 30 | 25 | 25 | 20 | 20 | 15 |
| | | 6.4m | 20 | 20 | 20 | 20 | 15 | 15 | 10 |
| | | 5.38m | 15 | 15 | 10 | 10 | 10 | 10 | 10 |
| | | 4.18m | 5 | 5 | 5 | 5 | 5 | 5 | 5 |
| | 最小張出 | 2.36m | 5 | 5 | 5 | 5 | 5 | – | – |

6. 各ブーム長さにおける各伸縮ブームの伸長状態（伸長割合%）は、下表のとおりです。

| ブーム長さ | 10.2m | 38.2m | 41.7m | 45.2m | 48.0m |
|---|---|---|---|---|---|
| 伸縮ブーム 1(%) | 0 | 0 | 46 | 92 | 100 |
| 伸縮ブーム 2(%) | 0 | 92 | 92 | 92 | 100 |
| 伸縮ブーム 3(%) | 0 | 92 | 92 | 92 | 100 |
| 伸縮ブーム 4(%) | 0 | 92 | 92 | 92 | 100 |
| 伸縮ブーム 5(%) | 0 | 92 | 92 | 92 | 100 |

## フルオートジブ定格総荷重表

7. スマートチャート性能選択時は前方･後方域でスマートチャート1性能･スマートチャート2性能で作業が行えます。
スマートチャート性能は、フロントアウトリガ張出幅とリヤアウトリガ張出幅の組み合わせによって、スマートチャート1性能で作業が行える前方の範囲（角度c）、スマートチャート2性能で作業が行える前方の範囲（角度d）および後方の範囲（角度e）が異なります。また側方域でのつり上げ性能は、アウトリガ張出幅に応じた標準性能となります。

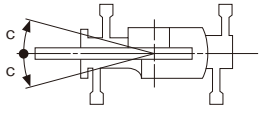


| 前 方 域 ( スマートチャート1性能) | | | | | | | | | |
|---|---|---|---|---|---|---|---|---|---|
| 角度 c° | | | フロントアウトリガ張出状態 | | | | | | |
| | | | 最大張出 | 中間張出 | | | | | 最小張出 |
| | | | 7.8m | 7.6m | 7.2m | 6.4m | 5.38m | 4.18m | 2.36m |
| リヤアウトリガ張出状態 | 最大張出 | 7.8m | 35 | 35 | 30 | 25 | 20 | 5 | 5 |
| | 中間張出 | 7.6m | 35 | 35 | 30 | 25 | 20 | 5 | 5 |
| | | 7.2m | 35 | 30 | 30 | 25 | 15 | 5 | 5 |
| | | 6.4m | 30 | 30 | 25 | 20 | 10 | 5 | 5 |
| | | 5.38m | 25 | 25 | 25 | 20 | 10 | 5 | 5 |
| | | 4.18m | 20 | 20 | 20 | 15 | 10 | 5 | 5 |
| | 最小張出 | 2.36m | 15 | 15 | 15 | 15 | 5 | 5 | 5 |

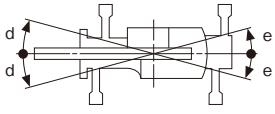


| 前 方 域 ( スマートチャート2性能 ) | | | | | | | | | |
|---|---|---|---|---|---|---|---|---|---|
| 角度 d° | | | フロントアウトリガ張出状態 | | | | | | |
| | | | 最大張出 | 中間張出 | | | | | 最小張出 |
| | | | 7.8m | 7.6m | 7.2m | 6.4m | 5.38m | 4.18m | 2.36m |
| リヤアウトリガ張出状態 | 最大張出 | 7.8m | 50 | 50 | 50 | 45 | 35 | 10 | 5 |
| | 中間張出 | 7.6m | 50 | 50 | 50 | 45 | 35 | 10 | 5 |
| | | 7.2m | 50 | 50 | 50 | 40 | 15 | 10 | 5 |
| | | 6.4m | 50 | 50 | 45 | 40 | 15 | 10 | 5 |
| | | 5.38m | 50 | 45 | 45 | 20 | 15 | 10 | 5 |
| | | 4.18m | 45 | 45 | 25 | 20 | 15 | 5 | 5 |
| | 最小張出 | 2.36m | 20 | 20 | 20 | 15 | 10 | 5 | 5 |

| 後 方 域 ( スマートチャート2性能 ) | | | | | | | | | |
|---|---|---|---|---|---|---|---|---|---|
| 角度 e° | | | フロントアウトリガ張出状態 | | | | | | |
| | | | 最大張出 | 中間張出 | | | | | 最小張出 |
| | | | 7.8m | 7.6m | 7.2m | 6.4m | 5.38m | 4.18m | 2.36m |
| リヤアウトリガ張出状態 | 最大張出 | 7.8m | 25 | 25 | 25 | 25 | 25 | 20 | 15 |
| | 中間張出 | 7.6m | 25 | 25 | 25 | 25 | 20 | 20 | 15 |
| | | 7.2m | 25 | 25 | 25 | 20 | 20 | 20 | 15 |
| | | 6.4m | 20 | 20 | 15 | 15 | 15 | 15 | 10 |
| | | 5.38m | 10 | 10 | 10 | 10 | 10 | 10 | 10 |
| | | 4.18m | 5 | 5 | 5 | 5 | 5 | 5 | 5 |
| | 最小張出 | 2.36m | 5 | 5 | 5 | 5 | 5 | – | – |

定格総荷重表中のシンボル、記号の説明

| | | | |
|---|---|---|---|
| FAJ | フルオートジブ (FAJ) の定格総荷重を示します。 | t JPN | 定格総荷重の単位を示します。 |
| | フルオートジブ (FAJ) のジブ長さを示します。 | m | ブーム長さを示します。 |
| | カウンタウエイト（C/W）の質量を示します。 | | ジブのオフセット角度を示し、ブームの中心線とジブの中心線のなす角度を示します。 |
| | アウトリガ張出幅を示します。 | m | 作業半径を示します。 |
| 360 ° | 吊上げ可能な旋回範囲を示します。 | % | ブーム伸縮状態 ( 伸縮割合 %) を示します。<br>IDはブーム伸縮状態に対応する番号を示します。 |
| SMART CHART スマートチャート1 | スマートチャート 1 の場合、<br>スマートチャート 1 性能で作業可能であることを示します。 | | 無負荷状態で作動可能なブーム起伏角度範囲を示します。 |
| | | | 標準巻掛本数を示します。 |
| SMART CHART スマートチャート2 | スマートチャート 2 の場合、<br>スマートチャート 2 性能で作業可能であることを示します。 | | 標準フックを示します。 |

## ■ 定格総荷重表の見方

1. アウトリガ張出幅とカウンタウエイトの質量とジブ長さに応じた性能を選択します。
2. ブーム長さとIDとオフセット角度の欄を見ます。
3. 作業半径を見ます。
4. オフセット角度と作業半径が交差するところが定格総荷重です。

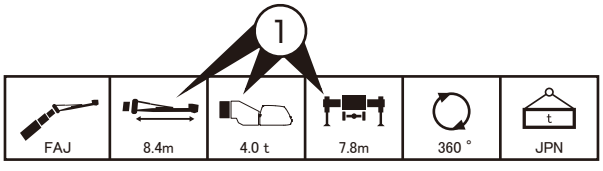


| m | 10.2 | 10.2 | 10.2 | 10.2 | 38.2 | 38.2 | 38.2 | 38.2 | 41.7 | 41.7 | 41.7 | 41.7 | 45.2 | 45.2 | 45.2 | 45.2 | 48.0 | 48.0 | 48.0 | 48.0 | m |
|---|---|---|---|---|---|---|---|---|---|---|---|---|---|---|---|---|---|---|---|---|---|
| ° | 5 | 25 | 45 | 60 | 5 | 25 | 45 | 60 | 5 | 25 | 45 | 60 | 5 | 25 | 45 | 60 | 5 | 25 | 45 | 60 | ° |
| 2.0 | 4.00 | | | | | | | | | | | | | | | | | | | | 2.0 |
| 3.0 | 4.00 | | | | | | | | | | | | | | | | | | | | 3.0 |
| 4.0 | 4.00 | 4.00 | | | | | | | | | | | | | | | | | | | 4.0 |
| 5.0 | 4.00 | 4.00 | | | | | | | | | | | | | | | | | | | 5.0 |
| 6.0 | 4.00 | 4.00 | 3.00 | | | | | | | | | | | | | | | | | | 6.0 |
| 7.0 | 4.00 | 4.00 | 2.85 | | 4.00 | | | | 4.00 | | | | | | | | | | | | 7.0 |
| 8.0 | 4.00 | 4.00 | 2.70 | 1.60 | 4.00 | | | | 4.00 | | | | 4.00 | | | | 4.00 | | | | 8.0 |
| 9.0 | 4.00 | 4.00 | 2.55 | 1.55 | 4.00 | | | | 4.00 | | | | 4.00 | | | | 4.00 | | | | 9.0 |
| 10.0 | 4.00 | 3.90 | 2.45 | 1.50 | 4.00 | 4.00 | | | 4.00 | 4.00 | | | 4.00 | | | | 4.00 | | | | 10.0 |
| 11.0 | 4.00 | 3.70 | 2.35 | | 4.00 | 4.00 | | | 4.00 | 4.00 | | | 4.00 | 4.00 | | | 4.00 | | | | 11.0 |
| 12.0 | 4.00 | 3.50 | 2.30 | | 4.00 | 4.00 | 2.65 | 1.55 | 4.00 | 4.00 | 2.65 | | 4.00 | 3.95 | | | 4.00 | 3.70 | | | 12.0 |
| 13.0 | 4.00 | 3.35 | | | 4.00 | 4.00 | 2.60 | 1.50 | | 3.90 | 2.60 | 1.50 | 4.00 | 3.80 | 2.60 | | 3.95 | 3.55 | | | 13.0 |
| 14.0 | 4.00 | 3.20 | | | 4.00 | 3.85 | 2.55 | 1.50 | | 3.75 | 2.55 | 1.50 | 4.00 | 3.65 | 2.55 | 1.50 | 3.85 | 3.45 | 2.60 | 1.50 | 14.0 |
| 16.0 | | | | | 4.00 | 3.60 | 2.45 | 1.45 | | 3.50 | 2.45 | 1.45 | 3.85 | 3.40 | 2.45 | 1.45 | 3.55 | 3.20 | 2.50 | 1.45 | 16.0 |
| 18.0 | | | | | 3.75 | 3.35 | 2.35 | 1.40 | 3.65 | 3.25 | 2.35 | 1.40 | 3.55 | 3.20 | 2.40 | 1.40 | 3.30 | 3.05 | 2.40 | 1.40 | 18.0 |
| 20.0 | | | | | 3.50 | 3.15 | 2.25 | 1.40 | 3.40 | 3.05 | 2.30 | 1.40 | 3.30 | 3.00 | 2.30 | 1.40 | 3.05 | 2.85 | 2.30 | 1.40 | 20.0 |
| 22.0 | | | | | 3.25 | 2.95 | 2.20 | 1.35 | 3.20 | 2.90 | 2.20 | 1.35 | 3.10 | 2.80 | 2.25 | 1.35 | 2.70 | 2.60 | 2.25 | 1.35 | 22.0 |
| 24.0 | | | | | 3.05 | 2.80 | 2.15 | | 2.95 | 2.75 | 2.15 | 1.35 | 2.90 | 2.65 | 2.15 | 1.35 | 2.35 | 2.25 | 2.20 | 1.35 | 24.0 |
| 26.0 | | | | | 2.85 | 2.65 | 2.10 | | 2.80 | 2.60 | 2.10 | | 2.70 | 2.55 | 2.10 | | 2.00 | 1.95 | 1.95 | 1.30 | 26.0 |
| 28.0 | | | | | 2.60 | 2.55 | 2.05 | | 2.60 | 2.45 | 2.05 | | 2.55 | 2.40 | 2.05 | | 1.75 | 1.70 | 1.75 | | 28.0 |
| 30.0 | | | | | 2.35 | 2.40 | 2.00 | | 2.35 | 2.35 | 2.00 | | 2.10 | 2.30 | 2.00 | | 1.50 | 1.50 | 1.50 | | 30.0 |
| 32.0 | | | | | 2.05 | 2.10 | | | 1.90 | 2.10 | 2.00 | | 1.70 | 1.90 | 2.00 | | 1.30 | 1.30 | 1.30 | | 32.0 |
| 34.0 | | | | | 1.70 | 1.85 | | | 1.55 | 1.70 | | | 1.30 | 1.50 | 1.60 | | 1.10 | 1.10 | 1.15 | | 34.0 |
| 36.0 | | | | | 1.35 | 1.45 | | | 1.20 | 1.35 | | | 0.95 | 1.15 | | | 0.95 | 0.95 | 0.95 | | 36.0 |
| 38.0 | | | | | 1.05 | 1.15 | | | 0.90 | 1.00 | | | 0.65 | 0.80 | | | 0.65 | 0.80 | | | 38.0 |
| 40.0 | | | | | 0.80 | | | | 0.65 | 0.75 | | | 0.40 | 0.55 | | | | 0.50 | | | 40.0 |
| 42.0 | | | | | 0.55 | | | | 0.40 | 0.50 | | | | | | | | | | | 42.0 |
| 44.0 | | | | | | | | | | | | | | | | | | | | | 44.0 |
| 46.0 | | | | | | | | | | | | | | | | | | | | | 46.0 |
| 48.0 | | | | | | | | | | | | | | | | | | | | | 48.0 |
| 50.0 | | | | | | | | | | | | | | | | | | | | | 50.0 |
| 52.0 | | | | | | | | | | | | | | | | | | | | | 52.0 |
| 54.0 | | | | | | | | | | | | | | | | | | | | | 54.0 |
| 55.0 | | | | | | | | | | | | | | | | | | | | | 55.0 |
| 56.0 | | | | | | | | | | | | | | | | | | | | | 56.0 |
| 1 | 0 | 0 | 0 | 0 | 0 | 0 | 0 | 0 | 46 | 46 | 46 | 46 | 92 | 92 | 92 | 92 | 100 | 100 | 100 | 100 | 1 |
| 2 | 0 | 0 | 0 | 0 | 92 | 92 | 92 | 92 | 92 | 92 | 92 | 92 | 92 | 92 | 92 | 92 | 100 | 100 | 100 | 100 | 2 |
| 3 | 0 | 0 | 0 | 0 | 92 | 92 | 92 | 92 | 92 | 92 | 92 | 92 | 92 | 92 | 92 | 92 | 100 | 100 | 100 | 100 | 3 |
| 4 | 0 | 0 | 0 | 0 | 92 | 92 | 92 | 92 | 92 | 92 | 92 | 92 | 92 | 92 | 92 | 92 | 100 | 100 | 100 | 100 | 4 |
| 5 | 0 | 0 | 0 | 0 | 92 | 92 | 92 | 92 | 92 | 92 | 92 | 92 | 92 | 92 | 92 | 92 | 100 | 100 | 100 | 100 | 5 |
| ID | 1 | 1 | 1 | 1 | 9 | 9 | 9 | 9 | 10 | 10 | 10 | 10 | 11 | 11 | 11 | 11 | 22 | 22 | 22 | 22 | ID |
| [DEG] | 28～84 | 35～84 | 54～84 | 68～84 | 18～84 | 35～84 | 54～84 | 68～84 | 30～84 | 3～84 | 54～84 | 67～84 | 41～84 | 45～84 | 55～84 | 69～84 | 48～84 | 48～84 | 55～84 | 68～84 | [DEG] |
| | 1 | 1 | 1 | 1 | 1 | 1 | 1 | 1 | | 1 | 1 | 1 | 1 | 1 | 1 | 1 | 1 | 1 | 1 | 1 | |
| | 5t | 5t | 5t | 5t | 5t | 5t | 5t | 5t | 5t | 5t | 5t | 5t | 5t | 5t | 5t | 5t | 5t | 5t | 5t | 5t | |

# フルオートジブ

| FAJ | 8.4m | 4.0 t | スマートチャート1 | JPN |
|---|---|---|---|---|

| m | 10.2 | 10.2 | 10.2 | 10.2 | 38.2 | 38.2 | 38.2 | 38.2 | 41.7 | 41.7 | 41.7 | 41.7 | 45.2 | 45.2 | 45.2 | 45.2 | 48.0 | 48.0 | 48.0 | 48.0 | m |
|---|---|---|---|---|---|---|---|---|---|---|---|---|---|---|---|---|---|---|---|---|---|
| ° | 5 | 25 | 45 | 60 | 5 | 25 | 45 | 60 | 5 | 25 | 45 | 60 | 5 | 25 | 45 | 60 | 5 | 25 | 45 | 60 | ° |
| 2.0 | 4.00 | | | | | | | | | | | | | | | | | | | | 2.0 |
| 3.0 | 4.00 | | | | | | | | | | | | | | | | | | | | 3.0 |
| 4.0 | 4.00 | 4.00 | | | | | | | | | | | | | | | | | | | 4.0 |
| 5.0 | 4.00 | 4.00 | | | | | | | | | | | | | | | | | | | 5.0 |
| 6.0 | 4.00 | 4.00 | 3.00 | | | | | | | | | | | | | | | | | | 6.0 |
| 7.0 | 4.00 | 4.00 | 2.85 | | 4.00 | | | | 4.00 | | | | | | | | | | | | 7.0 |
| 8.0 | 4.00 | 4.00 | 2.70 | 1.60 | 4.00 | | | | 4.00 | | | | 4.00 | | | | 4.00 | | | | 8.0 |
| 9.0 | 4.00 | 4.00 | 2.55 | 1.55 | 4.00 | | | | 4.00 | | | | 4.00 | | | | 4.00 | | | | 9.0 |
| 10.0 | 4.00 | 3.90 | 2.45 | 1.50 | 4.00 | 4.00 | | | 4.00 | 4.00 | | | 4.00 | | | | 4.00 | | | | 10.0 |
| 11.0 | 4.00 | 3.70 | 2.35 | | 4.00 | 4.00 | | | 4.00 | 4.00 | | | 4.00 | 4.00 | | | 4.00 | | | | 11.0 |
| 12.0 | 4.00 | 3.50 | 2.30 | | 4.00 | 4.00 | 2.65 | 1.55 | 4.00 | 4.00 | 2.65 | | 4.00 | 3.95 | | | 4.00 | 3.70 | | | 12.0 |
| 13.0 | 4.00 | 3.35 | | | 4.00 | 4.00 | 2.60 | 1.50 | 4.00 | 3.90 | 2.60 | 1.50 | 4.00 | 3.80 | 2.60 | | 3.95 | 3.55 | | | 13.0 |
| 14.0 | 4.00 | 3.20 | | | 4.00 | 3.85 | 2.55 | 1.50 | 4.00 | 3.75 | 2.55 | 1.50 | 4.00 | 3.65 | 2.55 | 1.50 | 3.85 | 3.45 | 2.60 | 1.50 | 14.0 |
| 16.0 | | | | | 4.00 | 3.60 | 2.45 | 1.45 | 3.95 | 3.50 | 2.45 | 1.45 | 3.85 | 3.40 | 2.45 | 1.45 | 3.55 | 3.20 | 2.50 | 1.45 | 16.0 |
| 18.0 | | | | | 3.75 | 3.35 | 2.35 | 1.40 | 3.65 | 3.25 | 2.35 | 1.40 | 3.55 | 3.20 | 2.40 | 1.40 | 3.30 | 3.05 | 2.40 | 1.40 | 18.0 |
| 20.0 | | | | | 3.50 | 3.15 | 2.25 | 1.40 | 3.40 | 3.05 | 2.30 | 1.40 | 3.30 | 3.00 | 2.30 | 1.40 | 3.05 | 2.85 | 2.30 | 1.40 | 20.0 |
| 22.0 | | | | | 3.25 | 2.95 | 2.20 | 1.35 | 3.20 | 2.90 | 2.20 | 1.35 | 3.10 | 2.80 | 2.25 | 1.35 | 2.70 | 2.60 | 2.25 | 1.35 | 22.0 |
| 24.0 | | | | | 3.05 | 2.80 | 2.15 | | 2.95 | 2.75 | 2.15 | 1.35 | 2.90 | 2.65 | 2.15 | 1.35 | 2.35 | 2.25 | 2.20 | 1.35 | 24.0 |
| 26.0 | | | | | 2.85 | 2.65 | 2.10 | | 2.80 | 2.60 | 2.10 | | 2.70 | 2.55 | 2.10 | | 2.00 | 1.95 | 1.95 | 1.30 | 26.0 |
| 28.0 | | | | | 2.60 | 2.55 | 2.05 | | 2.60 | 2.45 | 2.05 | | 2.55 | 2.40 | 2.05 | | 1.75 | 1.70 | 1.75 | | 28.0 |
| 30.0 | | | | | 2.35 | 2.40 | 2.00 | | 2.50 | 2.35 | 2.00 | | 2.40 | 2.30 | 2.00 | | 1.50 | 1.50 | 1.50 | | 30.0 |
| 32.0 | | | | | 2.05 | 2.10 | | | 2.25 | 2.25 | 2.00 | | 2.30 | 2.20 | 2.00 | | 1.30 | 1.30 | 1.30 | | 32.0 |
| 34.0 | | | | | 1.85 | 1.90 | | | 2.05 | 2.05 | | | 2.20 | 2.10 | 1.95 | | 1.10 | 1.10 | 1.15 | | 34.0 |
| 36.0 | | | | | 1.60 | 1.65 | | | 1.85 | 1.85 | | | 1.95 | 2.00 | | | 0.95 | 0.95 | 0.95 | | 36.0 |
| 38.0 | | | | | 1.40 | 1.45 | | | 1.65 | 1.65 | | | 1.60 | 1.75 | | | 0.80 | 0.80 | | | 38.0 |
| 40.0 | | | | | 1.25 | | | | 1.45 | 1.50 | | | 1.25 | 1.40 | | | 0.65 | 0.65 | | | 40.0 |
| 42.0 | | | | | 1.10 | | | | 1.25 | 1.30 | | | 0.95 | 1.05 | | | 0.50 | 0.55 | | | 42.0 |
| 44.0 | | | | | | | | | 0.95 | | | | 0.70 | 0.80 | | | | 0.40 | | | 44.0 |
| 46.0 | | | | | | | | | 0.70 | | | | 0.45 | | | | | | | | 46.0 |
| 48.0 | | | | | | | | | | | | | | | | | | | | | 48.0 |
| 50.0 | | | | | | | | | | | | | | | | | | | | | 50.0 |
| 52.0 | | | | | | | | | | | | | | | | | | | | | 52.0 |
| 54.0 | | | | | | | | | | | | | | | | | | | | | 54.0 |
| 55.0 | | | | | | | | | | | | | | | | | | | | | 55.0 |
| 56.0 | | | | | | | | | | | | | | | | | | | | | 56.0 |
| 1 | 0 | 0 | 0 | 0 | 0 | 0 | 0 | 0 | 46 | 46 | 46 | 46 | 92 | 92 | 92 | 92 | 100 | 100 | 100 | 100 | 1 |
| 2 | 0 | 0 | 0 | 0 | 92 | 92 | 92 | 92 | 92 | 92 | 92 | 92 | 92 | 92 | 92 | 92 | 100 | 100 | 100 | 100 | 2 |
| 3 | 0 | 0 | 0 | 0 | 92 | 92 | 92 | 92 | 92 | 92 | 92 | 92 | 92 | 92 | 92 | 92 | 100 | 100 | 100 | 100 | 3 |
| 4 | 0 | 0 | 0 | 0 | 92 | 92 | 92 | 92 | 92 | 92 | 92 | 92 | 92 | 92 | 92 | 92 | 100 | 100 | 100 | 100 | 4 |
| 5 | 0 | 0 | 0 | 0 | 92 | 92 | 92 | 92 | 92 | 92 | 92 | 92 | 92 | 92 | 92 | 92 | 100 | 100 | 100 | 100 | 5 |
| ID | 1 | 1 | 1 | 1 | 9 | 9 | 9 | 9 | 10 | 10 | 10 | 10 | 11 | 11 | 11 | 11 | 22 | 22 | 22 | 22 | ID |
| [DEG] | 28～84 | 35～84 | 54～84 | 68～84 | 18～84 | 35～84 | 54～84 | 68～84 | 15～84 | 33～84 | 54～84 | 67～84 | 28～84 | 37～84 | 55～84 | 69～84 | 42～84 | 42～84 | 55～84 | 68～84 | [DEG] |
| | 1 | 1 | 1 | 1 | 1 | 1 | 1 | 1 | 1 | 1 | 1 | 1 | 1 | 1 | 1 | 1 | 1 | 1 | 1 | 1 | |
| | 5t | 5t | 5t | 5t | 5t | 5t | 5t | 5t | 5t | 5t | 5t | 5t | 5t | 5t | 5t | 5t | 5t | 5t | 5t | 5t | |

| FAJ | 13.1m | 4.0 t | スマートチャート1 | JPN |
|---|---|---|---|---|

| m | 10.2 | 10.2 | 10.2 | 10.2 | 38.2 | 38.2 | 38.2 | 38.2 | 41.7 | 41.7 | 41.7 | 41.7 | 45.2 | 45.2 | 45.2 | 45.2 | 48.0 | 48.0 | 48.0 | 48.0 | m |
|---|---|---|---|---|---|---|---|---|---|---|---|---|---|---|---|---|---|---|---|---|---|
| ° | 5 | 25 | 45 | 60 | 5 | 25 | 45 | 60 | 5 | 25 | 45 | 60 | 5 | 25 | 45 | 60 | 5 | 25 | 45 | 60 | ° |
| 2.0 | 2.80 | | | | | | | | | | | | | | | | | | | | 2.0 |
| 3.0 | 2.80 | | | | | | | | | | | | | | | | | | | | 3.0 |
| 4.0 | 2.80 | | | | | | | | | | | | | | | | | | | | 4.0 |
| 5.0 | 2.80 | | | | | | | | | | | | | | | | | | | | 5.0 |
| 6.0 | 2.80 | | | | | | | | | | | | | | | | | | | | 6.0 |
| 7.0 | 2.80 | 2.60 | | | | | | | | | | | | | | | | | | | 7.0 |
| 8.0 | 2.80 | 2.45 | | | 2.80 | | | | 2.80 | | | | | | | | | | | | 8.0 |
| 9.0 | 2.80 | 2.30 | | | 2.80 | | | | 2.80 | | | | 2.80 | | | | | | | | 9.0 |
| 10.0 | 2.65 | 2.20 | 1.75 | | 2.80 | | | | 2.80 | | | | 2.80 | | | | 2.65 | | | | 10.0 |
| 11.0 | 2.50 | 2.10 | 1.65 | | 2.80 | | | | 2.80 | | | | 2.80 | | | | 2.65 | | | | 11.0 |
| 12.0 | 2.35 | 2.00 | 1.55 | 0.90 | 2.80 | | | | 2.80 | | | | 2.75 | | | | 2.60 | | | | 12.0 |
| 13.0 | 2.25 | 1.95 | 1.50 | 0.85 | 2.80 | 2.20 | | | 2.80 | 2.20 | | | 2.70 | | | | 2.55 | | | | 13.0 |
| 14.0 | 2.10 | 1.85 | 1.45 | 0.85 | 2.80 | 2.15 | | | 2.75 | 2.15 | | | 2.65 | 2.15 | | | 2.55 | | | | 14.0 |
| 16.0 | 1.95 | 1.75 | 1.35 | | 2.70 | 2.05 | 1.55 | | 2.65 | 2.05 | 1.55 | | 2.60 | 2.05 | | | 2.45 | 2.05 | | | 16.0 |
| 18.0 | 1.80 | 1.65 | | | 2.55 | 2.00 | 1.50 | 0.80 | 2.55 | 2.00 | 1.50 | 0.80 | 2.50 | 2.00 | 1.50 | 0.80 | 2.40 | 1.95 | 1.50 | | 18.0 |
| 20.0 | 1.70 | | | | 2.45 | 1.90 | 1.40 | 0.80 | 2.45 | 1.90 | 1.45 | 0.80 | 2.45 | 1.90 | 1.45 | 0.80 | 2.35 | 1.90 | 1.45 | 0.80 | 20.0 |
| 22.0 | | | | | 2.30 | 1.85 | 1.35 | 0.75 | 2.35 | 1.85 | 1.35 | 0.75 | 2.35 | 1.85 | 1.40 | 0.75 | 2.30 | 1.85 | 1.40 | 0.75 | 22.0 |
| 24.0 | | | | | 2.20 | 1.80 | 1.30 | 0.75 | 2.25 | 1.80 | 1.35 | 0.75 | 2.25 | 1.80 | 1.35 | 0.75 | 2.25 | 1.80 | 1.35 | 0.75 | 24.0 |
| 26.0 | | | | | 2.10 | 1.75 | 1.25 | 0.75 | 2.15 | 1.75 | 1.30 | 0.75 | 2.15 | 1.75 | 1.30 | 0.75 | 2.00 | 1.75 | 1.30 | 0.75 | 26.0 |
| 28.0 | | | | | 2.00 | 1.70 | 1.25 | | 2.05 | 1.70 | 1.25 | 0.75 | 2.10 | 1.75 | 1.25 | 0.70 | 1.75 | 1.75 | 1.25 | 0.70 | 28.0 |
| 30.0 | | | | | 1.95 | 1.70 | 1.20 | | 2.00 | 1.70 | 1.20 | | 2.00 | 1.70 | 1.20 | 0.70 | 1.55 | 1.55 | 1.20 | 0.70 | 30.0 |
| 32.0 | | | | | 1.90 | 1.65 | 1.20 | | 1.90 | 1.65 | 1.20 | | 1.95 | 1.65 | 1.20 | | 1.35 | 1.35 | 1.20 | | 32.0 |
| 34.0 | | | | | 1.80 | 1.60 | 1.15 | | 1.85 | 1.65 | 1.15 | | 1.90 | 1.65 | 1.15 | | 1.15 | 1.20 | 1.15 | | 34.0 |
| 36.0 | | | | | 1.75 | 1.60 | | | 1.80 | 1.60 | 1.15 | | 1.85 | 1.60 | 1.15 | | 1.00 | 1.00 | 1.05 | | 36.0 |
| 38.0 | | | | | 1.60 | 1.60 | | | 1.75 | 1.60 | | | 1.80 | 1.60 | 1.10 | | 0.85 | 0.90 | 0.90 | | 38.0 |
| 40.0 | | | | | 1.40 | 1.45 | | | 1.60 | 1.60 | | | 1.65 | 1.60 | 1.10 | | 0.70 | 0.75 | 0.80 | | 40.0 |
| 42.0 | | | | | 1.25 | 1.30 | | | 1.40 | 1.45 | | | 1.35 | 1.55 | | | 0.60 | 0.65 | | | 42.0 |
| 44.0 | | | | | 1.10 | | | | 1.25 | 1.30 | | | 1.10 | 1.25 | | | 0.50 | 0.55 | | | 44.0 |
| 46.0 | | | | | 0.95 | | | | 1.10 | 1.20 | | | 0.85 | 1.00 | | | 0.40 | 0.40 | | | 46.0 |
| 48.0 | | | | | 0.85 | | | | 0.85 | | | | 0.60 | 0.70 | | | | | | | 48.0 |
| 50.0 | | | | | | | | | 0.65 | | | | | | | | | | | | 50.0 |
| 52.0 | | | | | | | | | | | | | | | | | | | | | 52.0 |
| 54.0 | | | | | | | | | | | | | | | | | | | | | 54.0 |
| 55.0 | | | | | | | | | | | | | | | | | | | | | 55.0 |
| 56.0 | | | | | | | | | | | | | | | | | | | | | 56.0 |
| 1 | 0 | 0 | 0 | 0 | 0 | 0 | 0 | 0 | 46 | 46 | 46 | 46 | 92 | 92 | 92 | 92 | 100 | 100 | 100 | 100 | 1 |
| 2 | 0 | 0 | 0 | 0 | 92 | 92 | 92 | 92 | 92 | 92 | 92 | 92 | 92 | 92 | 92 | 92 | 100 | 100 | 100 | 100 | 2 |
| 3 | 0 | 0 | 0 | 0 | 92 | 92 | 92 | 92 | 92 | 92 | 92 | 92 | 92 | 92 | 92 | 92 | 100 | 100 | 100 | 100 | 3 |
| 4 | 0 | 0 | 0 | 0 | 92 | 92 | 92 | 92 | 92 | 92 | 92 | 92 | 92 | 92 | 92 | 92 | 100 | 100 | 100 | 100 | 4 |
| 5 | 0 | 0 | 0 | 0 | 92 | 92 | 92 | 92 | 92 | 92 | 92 | 92 | 92 | 92 | 92 | 92 | 100 | 100 | 100 | 100 | 5 |
| ID | 1 | 1 | 1 | 1 | 9 | 9 | 9 | 9 | 10 | 10 | 10 | 10 | 11 | 11 | 11 | 11 | 22 | 22 | 22 | 22 | ID |
| [DEG] | 0～84 | 40～84 | 57～84 | 71～84 | 0～84 | 38～84 | 56～84 | 69～84 | 20～84 | 37～84 | 57～84 | 68～84 | 35～84 | 39～84 | 54～84 | 68～84 | 43～84 | 47～84 | 57～84 | 70～84 | [DEG] |
| | 1 | 1 | 1 | 1 | 1 | 1 | 1 | 1 | 1 | 1 | 1 | 1 | 1 | 1 | 1 | 1 | 1 | 1 | 1 | 1 | |
| | 5t | 5t | 5t | 5t | 5t | 5t | 5t | 5t | 5t | 5t | 5t | 5t | 5t | 5t | 5t | 5t | 5t | 5t | 5t | 5t | |

| FAJ | 17.7m | 4.0 t | スマートチャート1 | JPN |
|---|---|---|---|---|

| m | 10.2 | 10.2 | 10.2 | 10.2 | 38.2 | 38.2 | 38.2 | 38.2 | 41.7 | 41.7 | 41.7 | 41.7 | 45.2 | 45.2 | 45.2 | 45.2 | 48.0 | 48.0 | 48.0 | 48.0 | m |
|---|---|---|---|---|---|---|---|---|---|---|---|---|---|---|---|---|---|---|---|---|---|
| ° | 5 | 25 | 45 | 60 | 5 | 25 | 45 | 60 | 5 | 25 | 45 | 60 | 5 | 25 | 45 | 60 | 5 | 25 | 45 | 60 | ° |
| 2.0 | | | | | | | | | | | | | | | | | | | | | 2.0 |
| 3.0 | 1.50 | | | | | | | | | | | | | | | | | | | | 3.0 |
| 4.0 | 1.50 | | | | | | | | | | | | | | | | | | | | 4.0 |
| 5.0 | 1.50 | | | | | | | | | | | | | | | | | | | | 5.0 |
| 6.0 | 1.50 | | | | | | | | | | | | | | | | | | | | 6.0 |
| 7.0 | 1.50 | | | | | | | | | | | | | | | | | | | | 7.0 |
| 8.0 | 1.50 | | | | 1.50 | | | | | | | | | | | | | | | | 8.0 |
| 9.0 | 1.50 | 1.25 | | | 1.50 | | | | 1.50 | | | | 1.45 | | | | | | | | 9.0 |
| 10.0 | 1.45 | 1.15 | | | 1.50 | | | | 1.50 | | | | 1.45 | | | | 1.35 | | | | 10.0 |
| 11.0 | 1.35 | 1.10 | | | 1.50 | | | | 1.45 | | | | 1.40 | | | | 1.35 | | | | 11.0 |
| 12.0 | 1.25 | 1.05 | | | 1.45 | | | | 1.45 | | | | 1.40 | | | | 1.35 | | | | 12.0 |
| 13.0 | 1.20 | 1.00 | | | 1.45 | | | | 1.40 | | | | 1.35 | | | | 1.30 | | | | 13.0 |
| 14.0 | 1.15 | 0.95 | 0.85 | | 1.40 | | | | 1.40 | | | | 1.35 | | | | 1.30 | | | | 14.0 |
| 16.0 | 1.00 | 0.90 | 0.80 | 0.55 | 1.35 | 1.00 | | | 1.30 | 1.00 | | | 1.30 | 1.00 | | | 1.25 | | | | 16.0 |
| 18.0 | 0.95 | 0.85 | 0.75 | 0.50 | 1.30 | 0.95 | | | 1.25 | 0.95 | | | 1.25 | 0.95 | | | 1.20 | 0.95 | | | 18.0 |
| 20.0 | 0.85 | 0.80 | 0.75 | 0.50 | 1.20 | 0.90 | 0.75 | | 1.20 | 0.90 | 0.75 | | 1.20 | 0.90 | | | 1.15 | 0.90 | | | 20.0 |
| 22.0 | 0.80 | 0.75 | 0.70 | | 1.15 | 0.90 | 0.75 | 0.50 | 1.15 | 0.90 | 0.75 | 0.50 | 1.15 | 0.90 | 0.75 | | 1.15 | 0.90 | 0.75 | | 22.0 |
| 24.0 | 0.75 | 0.75 | | | 1.10 | 0.85 | 0.70 | 0.45 | 1.10 | 0.85 | 0.70 | 0.45 | 1.10 | 0.85 | 0.70 | 0.45 | 1.10 | 0.85 | 0.70 | 0.45 | 24.0 |
| 26.0 | | | | | 1.05 | 0.85 | 0.70 | 0.45 | 1.05 | 0.85 | 0.70 | 0.45 | 1.05 | 0.85 | 0.70 | 0.45 | 1.05 | 0.85 | 0.70 | 0.45 | 26.0 |
| 28.0 | | | | | 1.00 | 0.80 | 0.70 | 0.45 | 1.00 | 0.80 | 0.70 | 0.45 | 1.05 | 0.80 | 0.70 | 0.45 | 1.00 | 0.80 | 0.70 | 0.45 | 28.0 |
| 30.0 | | | | | 0.95 | 0.80 | 0.70 | 0.45 | 0.95 | 0.80 | 0.70 | 0.45 | 1.00 | 0.80 | 0.70 | 0.45 | 1.00 | 0.80 | 0.70 | 0.45 | 30.0 |
| 32.0 | | | | | 0.90 | 0.75 | 0.70 | | 0.95 | 0.75 | 0.70 | 0.40 | 0.95 | 0.75 | 0.70 | 0.40 | 0.95 | 0.75 | 0.70 | 0.40 | 32.0 |
| 34.0 | | | | | 0.85 | 0.75 | 0.70 | | 0.90 | 0.75 | 0.70 | | 0.90 | 0.75 | 0.70 | 0.40 | 0.90 | 0.75 | 0.70 | 0.40 | 34.0 |
| 36.0 | | | | | 0.85 | 0.75 | 0.70 | | 0.85 | 0.75 | 0.70 | | 0.90 | 0.75 | 0.70 | | 0.90 | 0.75 | 0.65 | 0.40 | 36.0 |
| 38.0 | | | | | 0.80 | 0.70 | 0.70 | | 0.85 | 0.70 | 0.70 | | 0.85 | 0.70 | 0.65 | | 0.85 | 0.70 | 0.65 | | 38.0 |
| 40.0 | | | | | 0.80 | 0.70 | 0.70 | | 0.80 | 0.70 | 0.70 | | 0.80 | 0.70 | 0.65 | | 0.75 | 0.70 | 0.65 | | 40.0 |
| 42.0 | | | | | 0.75 | 0.70 | | | 0.80 | 0.70 | 0.70 | | 0.80 | 0.70 | 0.65 | | 0.65 | 0.70 | 0.65 | | 42.0 |
| 44.0 | | | | | 0.75 | 0.70 | | | 0.75 | 0.70 | | | 0.80 | 0.70 | 0.65 | | 0.55 | 0.60 | 0.65 | | 44.0 |
| 46.0 | | | | | 0.75 | 0.70 | | | 0.75 | 0.70 | | | 0.75 | 0.70 | | | 0.45 | 0.50 | 0.55 | | 46.0 |
| 48.0 | | | | | 0.70 | 0.70 | | | 0.75 | 0.70 | | | 0.75 | 0.70 | | | | 0.40 | | | 48.0 |
| 50.0 | | | | | 0.70 | | | | 0.70 | 0.70 | | | 0.70 | 0.70 | | | | | | | 50.0 |
| 52.0 | | | | | 0.70 | | | | 0.70 | | | | 0.50 | 0.70 | | | | | | | 52.0 |
| 54.0 | | | | | | | | | 0.60 | | | | | 0.45 | | | | | | | 54.0 |
| 55.0 | | | | | | | | | 0.50 | | | | | | | | | | | | 55.0 |
| 56.0 | | | | | | | | | 0.45 | | | | | | | | | | | | 56.0 |
| 1 | 0 | 0 | 0 | 0 | 0 | 0 | 0 | 0 | 46 | 46 | 46 | 46 | 92 | 92 | 92 | 92 | 100 | 100 | 100 | 100 | 1 |
| 2 | 0 | 0 | 0 | 0 | 92 | 92 | 92 | 92 | 92 | 92 | 92 | 92 | 92 | 92 | 92 | 92 | 100 | 100 | 100 | 100 | 2 |
| 3 | 0 | 0 | 0 | 0 | 92 | 92 | 92 | 92 | 92 | 92 | 92 | 92 | 92 | 92 | 92 | 92 | 100 | 100 | 100 | 100 | 3 |
| 4 | 0 | 0 | 0 | 0 | 92 | 92 | 92 | 92 | 92 | 92 | 92 | 92 | 92 | 92 | 92 | 92 | 100 | 100 | 100 | 100 | 4 |
| 5 | 0 | 0 | 0 | 0 | 92 | 92 | 92 | 92 | 92 | 92 | 92 | 92 | 92 | 92 | 92 | 92 | 100 | 100 | 100 | 100 | 5 |
| ID | 1 | 1 | 1 | 1 | 9 | 9 | 9 | 9 | 10 | 10 | 10 | 10 | 11 | 11 | 11 | 11 | 22 | 22 | 22 | 22 | ID |
| [DEG] | 19～84 | 31～84 | 51～84 | 65～84 | 17～84 | 37～84 | 54～84 | 71～84 | 0～84 | 40～84 | 55～84 | 70～84 | 37～84 | 39～84 | 57～84 | 69～84 | 49～84 | 52～84 | 57～84 | 68～84 | [DEG] |
| | 1 | 1 | 1 | 1 | 1 | 1 | 1 | 1 | 1 | 1 | 1 | 1 | 1 | 1 | 1 | 1 | 1 | 1 | 1 | 1 | |
| | 5t | 5t | 5t | 5t | 5t | 5t | 5t | 5t | 5t | 5t | 5t | 5t | 5t | 5t | 5t | 5t | 5t | 5t | 5t | 5t | |

| FAJ | 8.4m | 4.0 t | スマートチャート2 | JPN |
|---|---|---|---|---|

| m | 10.2 | 10.2 | 10.2 | 10.2 | 38.2 | 38.2 | 38.2 | 38.2 | 41.7 | 41.7 | 41.7 | 41.7 | 45.2 | 45.2 | 45.2 | 45.2 | 48.0 | 48.0 | 48.0 | 48.0 | m |
|---|---|---|---|---|---|---|---|---|---|---|---|---|---|---|---|---|---|---|---|---|---|
| ° | 5 | 25 | 45 | 60 | 5 | 25 | 45 | 60 | 5 | 25 | 45 | 60 | 5 | 25 | 45 | 60 | 5 | 25 | 45 | 60 | ° |
| 2.0 | 4.00 | | | | | | | | | | | | | | | | | | | | 2.0 |
| 3.0 | 4.00 | | | | | | | | | | | | | | | | | | | | 3.0 |
| 4.0 | 4.00 | 4.00 | | | | | | | | | | | | | | | | | | | 4.0 |
| 5.0 | 4.00 | 4.00 | | | | | | | | | | | | | | | | | | | 5.0 |
| 6.0 | 4.00 | 4.00 | 3.00 | | | | | | | | | | | | | | | | | | 6.0 |
| 7.0 | 4.00 | 4.00 | 2.85 | | 4.00 | | | | 4.00 | | | | | | | | | | | | 7.0 |
| 8.0 | 4.00 | 4.00 | 2.70 | 1.60 | 4.00 | | | | 4.00 | | | | 4.00 | | | | 4.00 | | | | 8.0 |
| 9.0 | 4.00 | 4.00 | 2.55 | 1.55 | 4.00 | | | | 4.00 | | | | 4.00 | | | | 4.00 | | | | 9.0 |
| 10.0 | 4.00 | 3.90 | 2.45 | 1.50 | 4.00 | 4.00 | | | 4.00 | 4.00 | | | 4.00 | | | | 4.00 | | | | 10.0 |
| 11.0 | 4.00 | 3.70 | 2.35 | | 4.00 | 4.00 | | | 4.00 | 4.00 | | | 4.00 | 4.00 | | | 4.00 | | | | 11.0 |
| 12.0 | 4.00 | 3.50 | 2.30 | | 4.00 | 4.00 | 2.65 | 1.55 | 4.00 | 4.00 | 2.65 | | 4.00 | 3.95 | | | 4.00 | 3.70 | | | 12.0 |
| 13.0 | 4.00 | 3.35 | | | 4.00 | 4.00 | 2.60 | 1.50 | 4.00 | 3.90 | 2.60 | 1.50 | 4.00 | 3.80 | 2.60 | | 3.95 | 3.55 | | | 13.0 |
| 14.0 | 4.00 | 3.20 | | | 4.00 | 3.85 | 2.55 | 1.50 | 4.00 | 3.75 | 2.55 | 1.50 | 4.00 | 3.65 | 2.55 | 1.50 | 3.85 | 3.45 | 2.60 | 1.50 | 14.0 |
| 16.0 | | | | | 4.00 | 3.60 | 2.45 | 1.45 | 3.95 | 3.50 | 2.45 | 1.45 | 3.85 | 3.40 | 2.45 | 1.45 | 3.55 | 3.20 | 2.50 | 1.45 | 16.0 |
| 18.0 | | | | | 3.75 | 3.35 | 2.35 | 1.40 | 3.65 | 3.25 | 2.35 | 1.40 | 3.55 | 3.20 | 2.40 | 1.40 | 3.30 | 3.05 | 2.40 | 1.40 | 18.0 |
| 20.0 | | | | | 3.50 | 3.15 | 2.25 | 1.40 | 3.40 | 3.05 | 2.30 | 1.40 | 3.30 | 3.00 | 2.30 | 1.40 | 3.05 | 2.85 | 2.30 | 1.40 | 20.0 |
| 22.0 | | | | | 3.25 | 2.95 | 2.20 | 1.35 | 3.20 | 2.90 | 2.20 | 1.35 | 3.10 | 2.80 | 2.25 | 1.35 | 2.70 | 2.60 | 2.25 | 1.35 | 22.0 |
| 24.0 | | | | | 3.05 | 2.80 | 2.15 | | 2.95 | 2.75 | 2.15 | 1.35 | 2.90 | 2.65 | 2.15 | 1.35 | 2.35 | 2.25 | 2.20 | 1.35 | 24.0 |
| 26.0 | | | | | 2.85 | 2.65 | 2.10 | | 2.80 | 2.60 | 2.10 | | 2.70 | 2.55 | 2.10 | | 2.00 | 1.95 | 1.95 | 1.30 | 26.0 |
| 28.0 | | | | | 2.60 | 2.55 | 2.05 | | 2.60 | 2.45 | 2.05 | | 2.55 | 2.40 | 2.05 | | 1.75 | 1.70 | 1.75 | | 28.0 |
| 30.0 | | | | | 2.35 | 2.40 | 2.00 | | 2.50 | 2.35 | 2.00 | | 2.40 | 2.30 | 2.00 | | 1.50 | 1.50 | 1.50 | | 30.0 |
| 32.0 | | | | | 2.05 | 2.10 | | | 2.25 | 2.25 | 2.00 | | 2.30 | 2.20 | 2.00 | | 1.30 | 1.30 | 1.30 | | 32.0 |
| 34.0 | | | | | 1.85 | 1.90 | | | 2.05 | 2.05 | | | 1.85 | 2.05 | 1.95 | | 1.10 | 1.10 | 1.15 | | 34.0 |
| 36.0 | | | | | 1.60 | 1.65 | | | 1.70 | 1.85 | | | 1.50 | 1.65 | | | 0.95 | 0.95 | 0.95 | | 36.0 |
| 38.0 | | | | | 1.40 | 1.45 | | | 1.40 | 1.50 | | | 1.15 | 1.30 | | | 0.80 | 0.80 | | | 38.0 |
| 40.0 | | | | | 1.25 | | | | 1.10 | 1.20 | | | 0.85 | 1.00 | | | 0.65 | 0.65 | | | 40.0 |
| 42.0 | | | | | 1.00 | | | | 0.85 | 0.90 | | | 0.60 | 0.70 | | | 0.50 | 0.55 | | | 42.0 |
| 44.0 | | | | | | | | | 0.60 | | | | | 0.45 | | | | 0.40 | | | 44.0 |
| 46.0 | | | | | | | | | 0.40 | | | | | | | | | | | | 46.0 |
| 48.0 | | | | | | | | | | | | | | | | | | | | | 48.0 |
| 50.0 | | | | | | | | | | | | | | | | | | | | | 50.0 |
| 52.0 | | | | | | | | | | | | | | | | | | | | | 52.0 |
| 54.0 | | | | | | | | | | | | | | | | | | | | | 54.0 |
| 55.0 | | | | | | | | | | | | | | | | | | | | | 55.0 |
| 56.0 | | | | | | | | | | | | | | | | | | | | | 56.0 |
| 1 | 0 | 0 | 0 | 0 | 0 | 0 | 0 | 0 | 46 | 46 | 46 | 46 | 92 | 92 | 92 | 92 | 100 | 100 | 100 | 100 | 1 |
| 2 | 0 | 0 | 0 | 0 | 92 | 92 | 92 | 92 | 92 | 92 | 92 | 92 | 92 | 92 | 92 | 92 | 100 | 100 | 100 | 100 | 2 |
| 3 | 0 | 0 | 0 | 0 | 92 | 92 | 92 | 92 | 92 | 92 | 92 | 92 | 92 | 92 | 92 | 92 | 100 | 100 | 100 | 100 | 3 |
| 4 | 0 | 0 | 0 | 0 | 92 | 92 | 92 | 92 | 92 | 92 | 92 | 92 | 92 | 92 | 92 | 92 | 100 | 100 | 100 | 100 | 4 |
| 5 | 0 | 0 | 0 | 0 | 92 | 92 | 92 | 92 | 92 | 92 | 92 | 92 | 92 | 92 | 92 | 92 | 100 | 100 | 100 | 100 | 5 |
| ID | 1 | 1 | 1 | 1 | 9 | 9 | 9 | 9 | 10 | 10 | 10 | 10 | 11 | 11 | 11 | 11 | 22 | 22 | 22 | 22 | ID |
| [DEG] | 28～84 | 35～84 | 54～84 | 68～84 | 18～84 | 35～84 | 54～84 | 68～84 | 15～84 | 33～84 | 54～84 | 67～84 | 37～84 | 37～84 | 55～84 | 69～84 | 42～84 | 42～84 | 55～84 | 68～84 | [DEG] |
| | 1 | 1 | 1 | 1 | 1 | 1 | 1 | 1 | 1 | 1 | 1 | 1 | 1 | 1 | 1 | 1 | 1 | 1 | 1 | 1 | |
| | 5t | 5t | 5t | 5t | 5t | 5t | 5t | 5t | 5t | 5t | 5t | 5t | 5t | 5t | 5t | 5t | 5t | 5t | 5t | 5t | |

# フルオートジブ

| FAJ | 13.1m | 4.0 t | スマートチャート2 | JPN |
|---|---|---|---|---|

| m | 10.2 | 10.2 | 10.2 | 10.2 | 38.2 | 38.2 | 38.2 | 38.2 | 41.7 | 41.7 | 41.7 | 41.7 | 45.2 | 45.2 | 45.2 | 45.2 | 48.0 | 48.0 | 48.0 | 48.0 | m |
|---|---|---|---|---|---|---|---|---|---|---|---|---|---|---|---|---|---|---|---|---|---|
| ° | 5 | 25 | 45 | 60 | 5 | 25 | 45 | 60 | 5 | 25 | 45 | 60 | 5 | 25 | 45 | 60 | 5 | 25 | 45 | 60 | ° |
| 2.0 | 2.80 | | | | | | | | | | | | | | | | | | | | 2.0 |
| 3.0 | 2.80 | | | | | | | | | | | | | | | | | | | | 3.0 |
| 4.0 | 2.80 | | | | | | | | | | | | | | | | | | | | 4.0 |
| 5.0 | 2.80 | | | | | | | | | | | | | | | | | | | | 5.0 |
| 6.0 | 2.80 | | | | | | | | | | | | | | | | | | | | 6.0 |
| 7.0 | 2.80 | 2.60 | | | | | | | | | | | | | | | | | | | 7.0 |
| 8.0 | 2.80 | 2.45 | | | 2.80 | | | | 2.80 | | | | | | | | | | | | 8.0 |
| 9.0 | 2.80 | 2.30 | | | 2.80 | | | | 2.80 | | | | 2.80 | | | | | | | | 9.0 |
| 10.0 | 2.65 | 2.20 | 1.75 | | 2.80 | | | | 2.80 | | | | 2.80 | | | | 2.65 | | | | 10.0 |
| 11.0 | 2.50 | 2.10 | 1.65 | | 2.80 | | | | 2.80 | | | | 2.80 | | | | 2.65 | | | | 11.0 |
| 12.0 | 2.35 | 2.00 | 1.55 | 0.90 | 2.80 | | | | 2.80 | | | | 2.75 | | | | 2.60 | | | | 12.0 |
| 13.0 | 2.25 | 1.95 | 1.50 | 0.85 | 2.80 | 2.20 | | | 2.80 | 2.20 | | | 2.70 | | | | 2.55 | | | | 13.0 |
| 14.0 | 2.10 | 1.85 | 1.45 | 0.85 | 2.80 | 2.15 | | | 2.75 | 2.15 | | | 2.65 | 2.15 | | | 2.55 | | | | 14.0 |
| 16.0 | 1.95 | 1.75 | 1.35 | | 2.70 | 2.05 | 1.55 | | 2.65 | 2.05 | 1.55 | | 2.60 | 2.05 | | | 2.45 | 2.05 | | | 16.0 |
| 18.0 | 1.80 | 1.65 | | | 2.55 | 2.00 | 1.50 | 0.80 | 2.55 | 2.00 | 1.50 | 0.80 | 2.50 | 2.00 | 1.50 | 0.80 | 2.40 | 1.95 | 1.50 | | 18.0 |
| 20.0 | 1.70 | | | | 2.45 | 1.90 | 1.40 | 0.80 | 2.45 | 1.90 | 1.45 | 0.80 | 2.45 | 1.90 | 1.45 | 0.80 | 2.35 | 1.90 | 1.45 | 0.80 | 20.0 |
| 22.0 | | | | | 2.30 | 1.85 | 1.35 | 0.75 | 2.35 | 1.85 | 1.35 | 0.75 | 2.35 | 1.85 | 1.40 | 0.75 | 2.30 | 1.85 | 1.40 | 0.75 | 22.0 |
| 24.0 | | | | | 2.20 | 1.80 | 1.30 | 0.75 | 2.25 | 1.80 | 1.35 | 0.75 | 2.25 | 1.80 | 1.35 | 0.75 | 2.25 | 1.80 | 1.35 | 0.75 | 24.0 |
| 26.0 | | | | | 2.10 | 1.75 | 1.25 | 0.75 | 2.15 | 1.75 | 1.30 | 0.75 | 2.15 | 1.75 | 1.30 | 0.75 | 2.00 | 1.75 | 1.30 | 0.75 | 26.0 |
| 28.0 | | | | | 2.00 | 1.70 | 1.25 | | 2.05 | 1.70 | 1.25 | 0.75 | 2.10 | 1.75 | 1.25 | 0.70 | 1.75 | 1.75 | 1.25 | 0.70 | 28.0 |
| 30.0 | | | | | 1.95 | 1.70 | 1.20 | | 2.00 | 1.70 | 1.20 | | 2.00 | 1.70 | 1.20 | 0.70 | 1.55 | 1.55 | 1.20 | 0.70 | 30.0 |
| 32.0 | | | | | 1.90 | 1.65 | 1.20 | | 1.90 | 1.65 | 1.20 | | 1.95 | 1.65 | 1.20 | | 1.35 | 1.35 | 1.20 | | 32.0 |
| 34.0 | | | | | 1.80 | 1.60 | 1.15 | | 1.85 | 1.65 | 1.15 | | 1.90 | 1.65 | 1.15 | | 1.15 | 1.20 | 1.15 | | 34.0 |
| 36.0 | | | | | 1.75 | 1.60 | | | 1.80 | 1.60 | 1.15 | | 1.85 | 1.60 | 1.15 | | 1.00 | 1.00 | 1.05 | | 36.0 |
| 38.0 | | | | | 1.60 | 1.60 | | | 1.75 | 1.60 | | | 1.50 | 1.60 | 1.10 | | 0.85 | 0.90 | 0.90 | | 38.0 |
| 40.0 | | | | | 1.40 | 1.45 | | | 1.45 | 1.60 | | | 1.20 | 1.45 | 1.10 | | 0.70 | 0.75 | 0.80 | | 40.0 |
| 42.0 | | | | | 1.25 | 1.30 | | | 1.20 | 1.35 | | | 0.95 | 1.15 | | | 0.60 | 0.65 | | | 42.0 |
| 44.0 | | | | | 1.10 | | | | 0.95 | 1.10 | | | 0.70 | 0.90 | | | 0.50 | 0.55 | | | 44.0 |
| 46.0 | | | | | 0.90 | | | | 0.75 | 0.85 | | | 0.50 | 0.65 | | | 0.40 | 0.40 | | | 46.0 |
| 48.0 | | | | | 0.70 | | | | 0.55 | | | | | | | | | | | | 48.0 |
| 50.0 | | | | | | | | | | | | | | | | | | | | | 50.0 |
| 52.0 | | | | | | | | | | | | | | | | | | | | | 52.0 |
| 54.0 | | | | | | | | | | | | | | | | | | | | | 54.0 |
| 55.0 | | | | | | | | | | | | | | | | | | | | | 55.0 |
| 56.0 | | | | | | | | | | | | | | | | | | | | | 56.0 |
| 1 | 0 | 0 | 0 | 0 | 0 | 0 | 0 | 0 | 46 | 46 | 46 | 46 | 92 | 92 | 92 | 92 | 100 | 100 | 100 | 100 | 1 |
| 2 | 0 | 0 | 0 | 0 | 92 | 92 | 92 | 92 | 92 | 92 | 92 | 92 | 92 | 92 | 92 | 92 | 100 | 100 | 100 | 100 | 2 |
| 3 | 0 | 0 | 0 | 0 | 92 | 92 | 92 | 92 | 92 | 92 | 92 | 92 | 92 | 92 | 92 | 92 | 100 | 100 | 100 | 100 | 3 |
| 4 | 0 | 0 | 0 | 0 | 92 | 92 | 92 | 92 | 92 | 92 | 92 | 92 | 92 | 92 | 92 | 92 | 100 | 100 | 100 | 100 | 4 |
| 5 | 0 | 0 | 0 | 0 | 92 | 92 | 92 | 92 | 92 | 92 | 92 | 92 | 92 | 92 | 92 | 92 | 100 | 100 | 100 | 100 | 5 |
| ID | 1 | 1 | 1 | 1 | 9 | 9 | 9 | 9 | 10 | 10 | 10 | 10 | 11 | 11 | 11 | 11 | 22 | 22 | 22 | 22 | ID |
| [DEG] | 0～84 | 40～84 | 57～84 | 71～84 | 0～84 | 38～84 | 56～84 | 69～84 | 26～84 | 37～84 | 57～84 | 68～84 | 39～84 | 43～84 | 54～84 | 68～84 | 43～84 | 47～84 | 57～84 | 70～84 | [DEG] |
| | 1 | 1 | 1 | 1 | 1 | 1 | 1 | 1 | 1 | 1 | 1 | 1 | 1 | 1 | 1 | 1 | 1 | 1 | 1 | 1 | |
| | 5t | 5t | 5t | 5t | 5t | 5t | 5t | 5t | 5t | 5t | 5t | 5t | 5t | 5t | 5t | 5t | 5t | 5t | 5t | 5t | |

| FAJ | 17.7m | 4.0 t | スマートチャート2 | JPN |
|---|---|---|---|---|

| m | 10.2 | 10.2 | 10.2 | 10.2 | 38.2 | 38.2 | 38.2 | 38.2 | 41.7 | 41.7 | 41.7 | 41.7 | 45.2 | 45.2 | 45.2 | 45.2 | 48.0 | 48.0 | 48.0 | 48.0 | m |
|---|---|---|---|---|---|---|---|---|---|---|---|---|---|---|---|---|---|---|---|---|---|
| ° | 5 | 25 | 45 | 60 | 5 | 25 | 45 | 60 | 5 | 25 | 45 | 60 | 5 | 25 | 45 | 60 | 5 | 25 | 45 | 60 | ° |
| 2.0 | | | | | | | | | | | | | | | | | | | | | 2.0 |
| 3.0 | 1.50 | | | | | | | | | | | | | | | | | | | | 3.0 |
| 4.0 | 1.50 | | | | | | | | | | | | | | | | | | | | 4.0 |
| 5.0 | 1.50 | | | | | | | | | | | | | | | | | | | | 5.0 |
| 6.0 | 1.50 | | | | | | | | | | | | | | | | | | | | 6.0 |
| 7.0 | 1.50 | | | | | | | | | | | | | | | | | | | | 7.0 |
| 8.0 | 1.50 | | | | 1.50 | | | | | | | | | | | | | | | | 8.0 |
| 9.0 | 1.50 | 1.25 | | | 1.50 | | | | 1.50 | | | | 1.45 | | | | | | | | 9.0 |
| 10.0 | 1.45 | 1.15 | | | 1.50 | | | | 1.50 | | | | 1.45 | | | | 1.35 | | | | 10.0 |
| 11.0 | 1.35 | 1.10 | | | 1.50 | | | | 1.45 | | | | 1.40 | | | | 1.35 | | | | 11.0 |
| 12.0 | 1.25 | 1.05 | | | 1.45 | | | | 1.45 | | | | 1.40 | | | | 1.35 | | | | 12.0 |
| 13.0 | 1.20 | 1.00 | | | 1.45 | | | | 1.40 | | | | 1.35 | | | | 1.30 | | | | 13.0 |
| 14.0 | 1.15 | 0.95 | 0.85 | | 1.40 | | | | 1.40 | | | | 1.35 | | | | 1.30 | | | | 14.0 |
| 16.0 | 1.00 | 0.90 | 0.80 | 0.55 | 1.35 | 1.00 | | | 1.30 | 1.00 | | | 1.30 | 1.00 | | | 1.25 | | | | 16.0 |
| 18.0 | 0.95 | 0.85 | 0.75 | 0.50 | 1.30 | 0.95 | | | 1.25 | 0.95 | | | 1.25 | 0.95 | | | 1.20 | 0.95 | | | 18.0 |
| 20.0 | 0.85 | 0.80 | 0.75 | 0.50 | 1.20 | 0.90 | 0.75 | | 1.20 | 0.90 | 0.75 | | 1.20 | 0.90 | | | 1.15 | 0.90 | | | 20.0 |
| 22.0 | 0.80 | 0.75 | 0.70 | | 1.15 | 0.90 | 0.75 | 0.50 | 1.15 | 0.90 | 0.75 | 0.50 | 1.15 | 0.90 | 0.75 | | 1.15 | 0.90 | 0.75 | | 22.0 |
| 24.0 | 0.75 | 0.75 | | | 1.10 | 0.85 | 0.70 | 0.45 | 1.10 | 0.85 | 0.70 | 0.45 | 1.10 | 0.85 | 0.70 | 0.45 | 1.10 | 0.85 | 0.70 | 0.45 | 24.0 |
| 26.0 | | | | | 1.05 | 0.85 | 0.70 | 0.45 | 1.05 | 0.85 | 0.70 | 0.45 | 1.05 | 0.85 | 0.70 | 0.45 | 1.05 | 0.85 | 0.70 | 0.45 | 26.0 |
| 28.0 | | | | | 1.00 | 0.80 | 0.70 | 0.45 | 1.00 | 0.80 | 0.70 | 0.45 | 1.05 | 0.80 | 0.70 | 0.45 | 1.00 | 0.80 | 0.70 | 0.45 | 28.0 |
| 30.0 | | | | | 0.95 | 0.80 | 0.70 | 0.45 | 0.95 | 0.80 | 0.70 | 0.45 | 1.00 | 0.80 | 0.70 | 0.45 | 1.00 | 0.80 | 0.70 | 0.45 | 30.0 |
| 32.0 | | | | | 0.90 | 0.75 | 0.70 | | 0.95 | 0.75 | 0.70 | 0.40 | 0.95 | 0.75 | 0.70 | 0.40 | 0.95 | 0.75 | 0.70 | 0.40 | 32.0 |
| 34.0 | | | | | 0.85 | 0.75 | 0.70 | | 0.90 | 0.75 | 0.70 | | 0.90 | 0.75 | 0.70 | 0.40 | 0.90 | 0.75 | 0.70 | 0.40 | 34.0 |
| 36.0 | | | | | 0.85 | 0.75 | 0.70 | | 0.85 | 0.75 | 0.70 | | 0.90 | 0.75 | 0.70 | | 0.90 | 0.75 | 0.65 | 0.40 | 36.0 |
| 38.0 | | | | | 0.80 | 0.70 | 0.70 | | 0.85 | 0.70 | 0.70 | | 0.85 | 0.70 | 0.65 | | 0.85 | 0.70 | 0.65 | | 38.0 |
| 40.0 | | | | | 0.80 | 0.70 | 0.70 | | 0.80 | 0.70 | 0.70 | | 0.80 | 0.70 | 0.65 | | 0.75 | 0.70 | 0.65 | | 40.0 |
| 42.0 | | | | | 0.75 | 0.70 | | | 0.80 | 0.70 | 0.70 | | 0.80 | 0.70 | 0.65 | | 0.65 | 0.70 | 0.65 | | 42.0 |
| 44.0 | | | | | 0.75 | 0.70 | | | 0.75 | 0.70 | | | 0.80 | 0.70 | 0.65 | | 0.55 | 0.60 | 0.65 | | 44.0 |
| 46.0 | | | | | 0.75 | 0.70 | | | 0.75 | 0.70 | | | 0.75 | 0.70 | | | 0.45 | 0.50 | 0.55 | | 46.0 |
| 48.0 | | | | | 0.70 | 0.70 | | | 0.75 | 0.70 | | | 0.60 | 0.70 | | | | 0.40 | | | 48.0 |
| 50.0 | | | | | 0.70 | | | | 0.65 | 0.70 | | | 0.40 | 0.60 | | | | | | | 50.0 |
| 52.0 | | | | | 0.65 | | | | 0.50 | | | | | 0.40 | | | | | | | 52.0 |
| 54.0 | | | | | | | | | | | | | | | | | | | | | 54.0 |
| 55.0 | | | | | | | | | | | | | | | | | | | | | 55.0 |
| 56.0 | | | | | | | | | | | | | | | | | | | | | 56.0 |
| 1 | 0 | 0 | 0 | 0 | 0 | 0 | 0 | 0 | 46 | 46 | 46 | 46 | 92 | 92 | 92 | 92 | 100 | 100 | 100 | 100 | 1 |
| 2 | 0 | 0 | 0 | 0 | 92 | 92 | 92 | 92 | 92 | 92 | 92 | 92 | 92 | 92 | 92 | 92 | 100 | 100 | 100 | 100 | 2 |
| 3 | 0 | 0 | 0 | 0 | 92 | 92 | 92 | 92 | 92 | 92 | 92 | 92 | 92 | 92 | 92 | 92 | 100 | 100 | 100 | 100 | 3 |
| 4 | 0 | 0 | 0 | 0 | 92 | 92 | 92 | 92 | 92 | 92 | 92 | 92 | 92 | 92 | 92 | 92 | 100 | 100 | 100 | 100 | 4 |
| 5 | 0 | 0 | 0 | 0 | 92 | 92 | 92 | 92 | 92 | 92 | 92 | 92 | 92 | 92 | 92 | 92 | 100 | 100 | 100 | 100 | 5 |
| ID | 1 | 1 | 1 | 1 | 9 | 9 | 9 | 9 | 10 | 10 | 10 | 10 | 11 | 11 | 11 | 11 | 22 | 22 | 22 | 22 | ID |
| [DEG] | 19～84 | 31～84 | 51～84 | 65～84 | 17～84 | 37～84 | 54～84 | 71～84 | 30～84 | 40～84 | 55～84 | 70～84 | 40～84 | 43～84 | 57～84 | 69～84 | 49～84 | 52～84 | 57～84 | 68～84 | [DEG] |
| | 1 | 1 | 1 | 1 | 1 | 1 | 1 | 1 | 1 | 1 | 1 | 1 | 1 | 1 | 1 | 1 | 1 | 1 | 1 | 1 | |
| | 5t | 5t | 5t | 5t | 5t | 5t | 5t | 5t | 5t | 5t | 5t | 5t | 5t | 5t | 5t | 5t | 5t | 5t | 5t | 5t | |

| FAJ | 8.4m | 4.0 t | 7.8m | 360 ° | JPN |
|---|---|---|---|---|---|

| m | 10.2 | 10.2 | 10.2 | 10.2 | 38.2 | 38.2 | 38.2 | 38.2 | 41.7 | 41.7 | 41.7 | 41.7 | 45.2 | 45.2 | 45.2 | 45.2 | 48.0 | 48.0 | 48.0 | 48.0 | m |
|---|---|---|---|---|---|---|---|---|---|---|---|---|---|---|---|---|---|---|---|---|---|
| ° | 5 | 25 | 45 | 60 | 5 | 25 | 45 | 60 | 5 | 25 | 45 | 60 | 5 | 25 | 45 | 60 | 5 | 25 | 45 | 60 | ° |
| 2.0 | 4.00 | | | | | | | | | | | | | | | | | | | | 2.0 |
| 3.0 | 4.00 | | | | | | | | | | | | | | | | | | | | 3.0 |
| 4.0 | 4.00 | 4.00 | | | | | | | | | | | | | | | | | | | 4.0 |
| 5.0 | 4.00 | 4.00 | | | | | | | | | | | | | | | | | | | 5.0 |
| 6.0 | 4.00 | 4.00 | 3.00 | | | | | | | | | | | | | | | | | | 6.0 |
| 7.0 | 4.00 | 4.00 | 2.85 | | 4.00 | | | | 4.00 | | | | | | | | | | | | 7.0 |
| 8.0 | 4.00 | 4.00 | 2.70 | 1.60 | 4.00 | | | | 4.00 | | | | 4.00 | | | | 4.00 | | | | 8.0 |
| 9.0 | 4.00 | 4.00 | 2.55 | 1.55 | 4.00 | | | | 4.00 | | | | 4.00 | | | | 4.00 | | | | 9.0 |
| 10.0 | 4.00 | 3.90 | 2.45 | 1.50 | 4.00 | 4.00 | | | 4.00 | 4.00 | | | 4.00 | | | | 4.00 | | | | 10.0 |
| 11.0 | 4.00 | 3.70 | 2.35 | | 4.00 | 4.00 | | | 4.00 | 4.00 | | | 4.00 | 4.00 | | | 4.00 | | | | 11.0 |
| 12.0 | 4.00 | 3.50 | 2.30 | | 4.00 | 4.00 | 2.65 | 1.55 | 4.00 | 4.00 | 2.65 | | 4.00 | 3.95 | | | 4.00 | 3.70 | | | 12.0 |
| 13.0 | 4.00 | 3.35 | | | 4.00 | 4.00 | 2.60 | 1.50 | 4.00 | 3.90 | 2.60 | 1.50 | 4.00 | 3.80 | 2.60 | | 3.95 | 3.55 | | | 13.0 |
| 14.0 | 4.00 | 3.20 | | | 4.00 | 3.85 | 2.55 | 1.50 | 4.00 | 3.75 | 2.55 | 1.50 | 4.00 | 3.65 | 2.55 | 1.50 | 3.85 | 3.45 | 2.60 | 1.50 | 14.0 |
| 16.0 | | | | | 4.00 | 3.60 | 2.45 | 1.45 | 3.95 | 3.50 | 2.45 | 1.45 | 3.85 | 3.40 | 2.45 | 1.45 | 3.55 | 3.20 | 2.50 | 1.45 | 16.0 |
| 18.0 | | | | | 3.75 | 3.35 | 2.35 | 1.40 | 3.65 | 3.25 | 2.35 | 1.40 | 3.55 | 3.20 | 2.40 | 1.40 | 3.30 | 3.05 | 2.40 | 1.40 | 18.0 |
| 20.0 | | | | | 3.50 | 3.15 | 2.25 | 1.40 | 3.40 | 3.05 | 2.30 | 1.40 | 3.30 | 3.00 | 2.30 | 1.40 | 3.05 | 2.85 | 2.30 | 1.40 | 20.0 |
| 22.0 | | | | | 3.25 | 2.95 | 2.20 | 1.35 | 3.20 | 2.90 | 2.20 | 1.35 | 3.10 | 2.80 | 2.25 | 1.35 | 2.70 | 2.60 | 2.25 | 1.35 | 22.0 |
| 24.0 | | | | | 3.05 | 2.80 | 2.15 | | 2.95 | 2.75 | 2.15 | 1.35 | 2.90 | 2.65 | 2.15 | 1.35 | 2.35 | 2.25 | 2.20 | 1.35 | 24.0 |
| 26.0 | | | | | 2.85 | 2.65 | 2.10 | | 2.80 | 2.60 | 2.10 | | 2.70 | 2.55 | 2.10 | | 2.00 | 1.95 | 1.95 | 1.30 | 26.0 |
| 28.0 | | | | | 2.60 | 2.55 | 2.05 | | 2.60 | 2.45 | 2.05 | | 2.55 | 2.40 | 2.05 | | 1.75 | 1.70 | 1.75 | | 28.0 |
| 30.0 | | | | | 2.35 | 2.40 | 2.00 | | 2.35 | 2.35 | 2.00 | | 2.10 | 2.30 | 2.00 | | 1.50 | 1.50 | 1.50 | | 30.0 |
| 32.0 | | | | | 2.05 | 2.10 | | | 1.90 | 2.10 | 2.00 | | 1.70 | 1.90 | 2.00 | | 1.30 | 1.30 | 1.30 | | 32.0 |
| 34.0 | | | | | 1.70 | 1.85 | | | 1.55 | 1.70 | | | 1.30 | 1.50 | 1.60 | | 1.10 | 1.10 | 1.15 | | 34.0 |
| 36.0 | | | | | 1.35 | 1.45 | | | 1.20 | 1.35 | | | 0.95 | 1.15 | | | 0.95 | 0.95 | 0.95 | | 36.0 |
| 38.0 | | | | | 1.05 | 1.15 | | | 0.90 | 1.00 | | | 0.65 | 0.80 | | | 0.65 | 0.80 | | | 38.0 |
| 40.0 | | | | | 0.80 | | | | 0.65 | 0.75 | | | 0.40 | 0.55 | | | | 0.50 | | | 40.0 |
| 42.0 | | | | | 0.55 | | | | 0.40 | 0.50 | | | | | | | | | | | 42.0 |
| 44.0 | | | | | | | | | | | | | | | | | | | | | 44.0 |
| 46.0 | | | | | | | | | | | | | | | | | | | | | 46.0 |
| 48.0 | | | | | | | | | | | | | | | | | | | | | 48.0 |
| 50.0 | | | | | | | | | | | | | | | | | | | | | 50.0 |
| 52.0 | | | | | | | | | | | | | | | | | | | | | 52.0 |
| 54.0 | | | | | | | | | | | | | | | | | | | | | 54.0 |
| 55.0 | | | | | | | | | | | | | | | | | | | | | 55.0 |
| 56.0 | | | | | | | | | | | | | | | | | | | | | 56.0 |
| 1 | 0 | 0 | 0 | 0 | 0 | 0 | 0 | 0 | 46 | 46 | 46 | 46 | 92 | 92 | 92 | 92 | 100 | 100 | 100 | 100 | 1 |
| 2 | 0 | 0 | 0 | 0 | 92 | 92 | 92 | 92 | 92 | 92 | 92 | 92 | 92 | 92 | 92 | 92 | 100 | 100 | 100 | 100 | 2 |
| 3 | 0 | 0 | 0 | 0 | 92 | 92 | 92 | 92 | 92 | 92 | 92 | 92 | 92 | 92 | 92 | 92 | 100 | 100 | 100 | 100 | 3 |
| 4 | 0 | 0 | 0 | 0 | 92 | 92 | 92 | 92 | 92 | 92 | 92 | 92 | 92 | 92 | 92 | 92 | 100 | 100 | 100 | 100 | 4 |
| 5 | 0 | 0 | 0 | 0 | 92 | 92 | 92 | 92 | 92 | 92 | 92 | 92 | 92 | 92 | 92 | 92 | 100 | 100 | 100 | 100 | 5 |
| ID | 1 | 1 | 1 | 1 | 9 | 9 | 9 | 9 | 10 | 10 | 10 | 10 | 11 | 11 | 11 | 11 | 22 | 22 | 22 | 22 | ID |
| [DEG] | 28～84 | 35～84 | 54～84 | 68～84 | 18～84 | 35～84 | 54～84 | 68～84 | 30～84 | 33～84 | 54～84 | 67～84 | 41～84 | 45～84 | 55～84 | 69～84 | 48～84 | 48～84 | 55～84 | 68～84 | [DEG] |
| | 1 | 1 | 1 | 1 | 1 | 1 | 1 | 1 | 1 | 1 | 1 | 1 | 1 | 1 | 1 | 1 | 1 | 1 | 1 | 1 | |
| | 5t | 5t | 5t | 5t | 5t | 5t | 5t | 5t | 5t | 5t | 5t | 5t | 5t | 5t | 5t | 5t | 5t | 5t | 5t | 5t | |

| FAJ | 13.1m | 4.0 t | 7.8m | 360 ° | JPN |
|---|---|---|---|---|---|

| m | 10.2 | 10.2 | 10.2 | 10.2 | 38.2 | 38.2 | 38.2 | 38.2 | 41.7 | 41.7 | 41.7 | 41.7 | 45.2 | 45.2 | 45.2 | 45.2 | 48.0 | 48.0 | 48.0 | 48.0 | m |
|---|---|---|---|---|---|---|---|---|---|---|---|---|---|---|---|---|---|---|---|---|---|
| ° | 5 | 25 | 45 | 60 | 5 | 25 | 45 | 60 | 5 | 25 | 45 | 60 | 5 | 25 | 45 | 60 | 5 | 25 | 45 | 60 | ° |
| 2.0 | 2.80 | | | | | | | | | | | | | | | | | | | | 2.0 |
| 3.0 | 2.80 | | | | | | | | | | | | | | | | | | | | 3.0 |
| 4.0 | 2.80 | | | | | | | | | | | | | | | | | | | | 4.0 |
| 5.0 | 2.80 | | | | | | | | | | | | | | | | | | | | 5.0 |
| 6.0 | 2.80 | | | | | | | | | | | | | | | | | | | | 6.0 |
| 7.0 | 2.80 | 2.60 | | | | | | | | | | | | | | | | | | | 7.0 |
| 8.0 | 2.80 | 2.45 | | | 2.80 | | | | 2.80 | | | | | | | | | | | | 8.0 |
| 9.0 | 2.80 | 2.30 | | | 2.80 | | | | 2.80 | | | | 2.80 | | | | | | | | 9.0 |
| 10.0 | 2.65 | 2.20 | 1.75 | | 2.80 | | | | 2.80 | | | | 2.80 | | | | 2.65 | | | | 10.0 |
| 11.0 | 2.50 | 2.10 | 1.65 | | 2.80 | | | | 2.80 | | | | 2.80 | | | | 2.65 | | | | 11.0 |
| 12.0 | 2.35 | 2.00 | 1.55 | 0.90 | 2.80 | | | | 2.80 | | | | 2.75 | | | | 2.60 | | | | 12.0 |
| 13.0 | 2.25 | 1.95 | 1.50 | 0.85 | 2.80 | 2.20 | | | 2.80 | 2.20 | | | 2.70 | | | | 2.55 | | | | 13.0 |
| 14.0 | 2.10 | 1.85 | 1.45 | 0.85 | 2.80 | 2.15 | | | 2.75 | 2.15 | | | 2.65 | 2.15 | | | 2.55 | | | | 14.0 |
| 16.0 | 1.95 | 1.75 | 1.35 | | 2.70 | 2.05 | 1.55 | | 2.65 | 2.05 | 1.55 | | 2.60 | 2.05 | | | 2.45 | 2.05 | | | 16.0 |
| 18.0 | 1.80 | 1.65 | | | 2.55 | 2.00 | 1.50 | 0.80 | 2.55 | 2.00 | 1.50 | 0.80 | 2.50 | 2.00 | 1.50 | 0.80 | 2.40 | 1.95 | 1.50 | | 18.0 |
| 20.0 | 1.70 | | | | 2.45 | 1.90 | 1.40 | 0.80 | 2.45 | 1.90 | 1.45 | 0.80 | 2.45 | 1.90 | 1.45 | 0.80 | 2.35 | 1.90 | 1.45 | 0.80 | 20.0 |
| 22.0 | | | | | 2.30 | 1.85 | 1.35 | 0.75 | 2.35 | 1.85 | 1.35 | 0.75 | 2.35 | 1.85 | 1.40 | 0.75 | 2.30 | 1.85 | 1.40 | 0.75 | 22.0 |
| 24.0 | | | | | 2.20 | 1.80 | 1.30 | 0.75 | 2.25 | 1.80 | 1.35 | 0.75 | 2.25 | 1.80 | 1.35 | 0.75 | 2.25 | 1.80 | 1.35 | 0.75 | 24.0 |
| 26.0 | | | | | 2.10 | 1.75 | 1.25 | 0.75 | 2.15 | 1.75 | 1.30 | 0.75 | 2.15 | 1.75 | 1.30 | 0.75 | 2.00 | 1.75 | 1.30 | 0.75 | 26.0 |
| 28.0 | | | | | 2.00 | 1.70 | 1.25 | | 2.05 | 1.70 | 1.25 | 0.75 | 2.10 | 1.75 | 1.25 | 0.70 | 1.75 | 1.75 | 1.25 | 0.70 | 28.0 |
| 30.0 | | | | | 1.95 | 1.70 | 1.20 | | 2.00 | 1.70 | 1.20 | | 2.00 | 1.70 | 1.20 | 0.70 | 1.55 | 1.55 | 1.20 | 0.70 | 30.0 |
| 32.0 | | | | | 1.90 | 1.65 | 1.20 | | 1.90 | 1.65 | 1.20 | | 1.95 | 1.65 | 1.20 | | 1.35 | 1.35 | 1.20 | | 32.0 |
| 34.0 | | | | | 1.80 | 1.60 | 1.15 | | 1.85 | 1.65 | 1.15 | | 1.65 | 1.65 | 1.15 | | 1.15 | 1.20 | 1.15 | | 34.0 |
| 36.0 | | | | | 1.75 | 1.60 | | | 1.55 | 1.60 | 1.15 | | 1.35 | 1.60 | 1.15 | | 1.00 | 1.00 | 1.05 | | 36.0 |
| 38.0 | | | | | 1.45 | 1.60 | | | 1.25 | 1.50 | | | 1.05 | 1.30 | 1.10 | | 0.85 | 0.90 | 0.90 | | 38.0 |
| 40.0 | | | | | 1.15 | 1.30 | | | 1.00 | 1.20 | | | 0.75 | 1.00 | 1.10 | | 0.70 | 0.75 | 0.80 | | 40.0 |
| 42.0 | | | | | 0.90 | 1.05 | | | 0.75 | 0.90 | | | 0.55 | 0.70 | | | 0.50 | 0.65 | | | 42.0 |
| 44.0 | | | | | 0.70 | | | | 0.55 | 0.65 | | | | 0.50 | | | | 0.45 | | | 44.0 |
| 46.0 | | | | | 0.50 | | | | | | | | | | | | | | | | 46.0 |
| 48.0 | | | | | | | | | | | | | | | | | | | | | 48.0 |
| 50.0 | | | | | | | | | | | | | | | | | | | | | 50.0 |
| 52.0 | | | | | | | | | | | | | | | | | | | | | 52.0 |
| 54.0 | | | | | | | | | | | | | | | | | | | | | 54.0 |
| 55.0 | | | | | | | | | | | | | | | | | | | | | 55.0 |
| 56.0 | | | | | | | | | | | | | | | | | | | | | 56.0 |
| 1 | 0 | 0 | 0 | 0 | 0 | 0 | 0 | 0 | 46 | 46 | 46 | 46 | 92 | 92 | 92 | 92 | 100 | 100 | 100 | 100 | 1 |
| 2 | 0 | 0 | 0 | 0 | 92 | 92 | 92 | 92 | 92 | 92 | 92 | 92 | 92 | 92 | 92 | 92 | 100 | 100 | 100 | 100 | 2 |
| 3 | 0 | 0 | 0 | 0 | 92 | 92 | 92 | 92 | 92 | 92 | 92 | 92 | 92 | 92 | 92 | 92 | 100 | 100 | 100 | 100 | 3 |
| 4 | 0 | 0 | 0 | 0 | 92 | 92 | 92 | 92 | 92 | 92 | 92 | 92 | 92 | 92 | 92 | 92 | 100 | 100 | 100 | 100 | 4 |
| 5 | 0 | 0 | 0 | 0 | 92 | 92 | 92 | 92 | 92 | 92 | 92 | 92 | 92 | 92 | 92 | 92 | 100 | 100 | 100 | 100 | 5 |
| ID | 1 | 1 | 1 | 1 | 9 | 9 | 9 | 9 | 10 | 10 | 10 | 10 | 11 | 11 | 11 | 11 | 22 | 22 | 22 | 22 | ID |
| [DEG] | 0～84 | 40～84 | 57～84 | 71～84 | 22～84 | 38～84 | 56～84 | 69～84 | 36～84 | 41～84 | 57～84 | 68～84 | 45～84 | 46～84 | 54～84 | 68～84 | 48～84 | 49～84 | 57～84 | 70～84 | [DEG] |
| | 1 | 1 | 1 | 1 | 1 | 1 | 1 | 1 | 1 | 1 | 1 | 1 | 1 | 1 | 1 | 1 | 1 | 1 | 1 | 1 | |
| | 5t | 5t | 5t | 5t | 5t | 5t | 5t | 5t | 5t | 5t | 5t | 5t | 5t | 5t | 5t | 5t | 5t | 5t | 5t | 5t | |

# フルオートジブ

| FAJ | 17.7m | 4.0 t | 7.8m | 360 ° | JPN |
|---|---|---|---|---|---|

| m | 10.2 | 10.2 | 10.2 | 10.2 | 38.2 | 38.2 | 38.2 | 38.2 | 41.7 | 41.7 | 41.7 | 41.7 | 45.2 | 45.2 | 45.2 | 45.2 | 48.0 | 48.0 | 48.0 | 48.0 | m |
|---|---|---|---|---|---|---|---|---|---|---|---|---|---|---|---|---|---|---|---|---|---|
| ° | 5 | 25 | 45 | 60 | 5 | 25 | 45 | 60 | 5 | 25 | 45 | 60 | 5 | 25 | 45 | 60 | 5 | 25 | 45 | 60 | ° |
| 2.0 | | | | | | | | | | | | | | | | | | | | | 2.0 |
| 3.0 | 1.50 | | | | | | | | | | | | | | | | | | | | 3.0 |
| 4.0 | 1.50 | | | | | | | | | | | | | | | | | | | | 4.0 |
| 5.0 | 1.50 | | | | | | | | | | | | | | | | | | | | 5.0 |
| 6.0 | 1.50 | | | | | | | | | | | | | | | | | | | | 6.0 |
| 7.0 | 1.50 | | | | | | | | | | | | | | | | | | | | 7.0 |
| 8.0 | 1.50 | | | | 1.50 | | | | | | | | | | | | | | | | 8.0 |
| 9.0 | 1.50 | 1.25 | | | 1.50 | | | | 1.50 | | | | 1.45 | | | | | | | | 9.0 |
| 10.0 | 1.45 | 1.15 | | | 1.50 | | | | 1.50 | | | | 1.45 | | | | 1.35 | | | | 10.0 |
| 11.0 | 1.35 | 1.10 | | | 1.50 | | | | 1.45 | | | | 1.40 | | | | 1.35 | | | | 11.0 |
| 12.0 | 1.25 | 1.05 | | | 1.45 | | | | 1.45 | | | | 1.40 | | | | 1.35 | | | | 12.0 |
| 13.0 | 1.20 | 1.00 | | | 1.45 | | | | 1.40 | | | | 1.35 | | | | 1.30 | | | | 13.0 |
| 14.0 | 1.15 | 0.95 | 0.85 | | 1.40 | | | | 1.40 | | | | 1.35 | | | | 1.30 | | | | 14.0 |
| 16.0 | 1.00 | 0.90 | 0.80 | 0.55 | 1.35 | 1.00 | | | 1.30 | 1.00 | | | 1.30 | 1.00 | | | 1.25 | | | | 16.0 |
| 18.0 | 0.95 | 0.85 | 0.75 | 0.50 | 1.30 | 0.95 | | | 1.25 | 0.95 | | | 1.25 | 0.95 | | | 1.20 | 0.95 | | | 18.0 |
| 20.0 | 0.85 | 0.80 | 0.75 | 0.50 | 1.20 | 0.90 | 0.75 | | 1.20 | 0.90 | 0.75 | | 1.20 | 0.90 | | | 1.15 | 0.90 | | | 20.0 |
| 22.0 | 0.80 | 0.75 | 0.70 | | 1.15 | 0.90 | 0.75 | 0.50 | 1.15 | 0.90 | 0.75 | 0.50 | 1.15 | 0.90 | 0.75 | | 1.15 | 0.90 | 0.75 | | 22.0 |
| 24.0 | 0.75 | 0.75 | | | 1.10 | 0.85 | 0.70 | 0.45 | 1.10 | 0.85 | 0.70 | 0.45 | 1.10 | 0.85 | 0.70 | 0.45 | 1.10 | 0.85 | 0.70 | 0.45 | 24.0 |
| 26.0 | | | | | 1.05 | 0.85 | 0.70 | 0.45 | 1.05 | 0.85 | 0.70 | 0.45 | 1.05 | 0.85 | 0.70 | 0.45 | 1.05 | 0.85 | 0.70 | 0.45 | 26.0 |
| 28.0 | | | | | 1.00 | 0.80 | 0.70 | 0.45 | 1.00 | 0.80 | 0.70 | 0.45 | 1.05 | 0.80 | 0.70 | 0.45 | 1.00 | 0.80 | 0.70 | 0.45 | 28.0 |
| 30.0 | | | | | 0.95 | 0.80 | 0.70 | 0.45 | 0.95 | 0.80 | 0.70 | 0.45 | 1.00 | 0.80 | 0.70 | 0.45 | 1.00 | 0.80 | 0.70 | 0.45 | 30.0 |
| 32.0 | | | | | 0.90 | 0.75 | 0.70 | | 0.95 | 0.75 | 0.70 | 0.40 | 0.95 | 0.75 | 0.70 | 0.40 | 0.95 | 0.75 | 0.70 | 0.40 | 32.0 |
| 34.0 | | | | | 0.85 | 0.75 | 0.70 | | 0.90 | 0.75 | 0.70 | | 0.90 | 0.75 | 0.70 | 0.40 | 0.90 | 0.75 | 0.70 | 0.40 | 34.0 |
| 36.0 | | | | | 0.85 | 0.75 | 0.70 | | 0.85 | 0.75 | 0.70 | | 0.90 | 0.75 | 0.70 | | 0.90 | 0.75 | 0.65 | 0.40 | 36.0 |
| 38.0 | | | | | 0.80 | 0.70 | 0.70 | | 0.85 | 0.70 | 0.70 | | 0.85 | 0.70 | 0.65 | | 0.85 | 0.70 | 0.65 | | 38.0 |
| 40.0 | | | | | 0.80 | 0.70 | 0.70 | | 0.80 | 0.70 | 0.70 | | 0.80 | 0.70 | 0.65 | | 0.75 | 0.70 | 0.65 | | 40.0 |
| 42.0 | | | | | 0.75 | 0.70 | | | 0.80 | 0.70 | 0.70 | | 0.80 | 0.70 | 0.65 | | 0.65 | 0.70 | 0.65 | | 42.0 |
| 44.0 | | | | | 0.75 | 0.70 | | | 0.75 | 0.70 | | | 0.60 | 0.70 | 0.65 | | 0.55 | 0.60 | 0.65 | | 44.0 |
| 46.0 | | | | | 0.75 | 0.70 | | | 0.65 | 0.70 | | | 0.40 | 0.65 | | | | 0.50 | 0.55 | | 46.0 |
| 48.0 | | | | | 0.60 | 0.70 | | | 0.45 | 0.60 | | | | 0.45 | | | | 0.40 | | | 48.0 |
| 50.0 | | | | | 0.45 | | | | | 0.40 | | | | | | | | | | | 50.0 |
| 52.0 | | | | | | | | | | | | | | | | | | | | | 52.0 |
| 54.0 | | | | | | | | | | | | | | | | | | | | | 54.0 |
| 55.0 | | | | | | | | | | | | | | | | | | | | | 55.0 |
| 56.0 | | | | | | | | | | | | | | | | | | | | | 56.0 |
| 1 | 0 | 0 | 0 | 0 | 0 | 0 | 0 | 0 | 46 | 46 | 46 | 46 | 92 | 92 | 92 | 92 | 100 | 100 | 100 | 100 | 1 |
| 2 | 0 | 0 | 0 | 0 | 92 | 92 | 92 | 92 | 92 | 92 | 92 | 92 | 92 | 92 | 92 | 92 | 100 | 100 | 100 | 100 | 2 |
| 3 | 0 | 0 | 0 | 0 | 92 | 92 | 92 | 92 | 92 | 92 | 92 | 92 | 92 | 92 | 92 | 92 | 100 | 100 | 100 | 100 | 3 |
| 4 | 0 | 0 | 0 | 0 | 92 | 92 | 92 | 92 | 92 | 92 | 92 | 92 | 92 | 92 | 92 | 92 | 100 | 100 | 100 | 100 | 4 |
| 5 | 0 | 0 | 0 | 0 | 92 | 92 | 92 | 92 | 92 | 92 | 92 | 92 | 92 | 92 | 92 | 92 | 100 | 100 | 100 | 100 | 5 |
| ID | 1 | 1 | 1 | 1 | 9 | 9 | 9 | 9 | 10 | 10 | 10 | 10 | 11 | 11 | 11 | 11 | 22 | 22 | 22 | 22 | ID |
| [DEG] | 19～84 | 31～84 | 51～84 | 65～84 | 25～84 | 37～84 | 54～84 | 71～84 | 38～84 | 40～84 | 55～84 | 70～84 | 46～84 | 49～84 | 57～84 | 69～84 | 51～84 | 52～84 | 57～84 | 68～84 | [DEG] |
| | 1 | 1 | 1 | 1 | 1 | 1 | 1 | 1 | 1 | 1 | 1 | 1 | 1 | 1 | 1 | 1 | 1 | 1 | 1 | 1 | |
| | 5t | 5t | 5t | 5t | 5t | 5t | 5t | 5t | 5t | 5t | 5t | 5t | 5t | 5t | 5t | 5t | 5t | 5t | 5t | 5t | |

| FAJ | 8.4m | 4.0 t | 7.6m | 360 ° | JPN |
|---|---|---|---|---|---|

| m | 10.2 | 10.2 | 10.2 | 10.2 | 38.2 | 38.2 | 38.2 | 38.2 | 41.7 | 41.7 | 41.7 | 41.7 | 45.2 | 45.2 | 45.2 | 45.2 | 48.0 | 48.0 | 48.0 | 48.0 | m |
|---|---|---|---|---|---|---|---|---|---|---|---|---|---|---|---|---|---|---|---|---|---|
| ° | 5 | 25 | 45 | 60 | 5 | 25 | 45 | 60 | 5 | 25 | 45 | 60 | 5 | 25 | 45 | 60 | 5 | 25 | 45 | 60 | ° |
| 2.0 | 4.00 | | | | | | | | | | | | | | | | | | | | 2.0 |
| 3.0 | 4.00 | | | | | | | | | | | | | | | | | | | | 3.0 |
| 4.0 | 4.00 | 4.00 | | | | | | | | | | | | | | | | | | | 4.0 |
| 5.0 | 4.00 | 4.00 | | | | | | | | | | | | | | | | | | | 5.0 |
| 6.0 | 4.00 | 4.00 | 3.00 | | | | | | | | | | | | | | | | | | 6.0 |
| 7.0 | 4.00 | 4.00 | 2.85 | | 4.00 | | | | 4.00 | | | | | | | | | | | | 7.0 |
| 8.0 | 4.00 | 4.00 | 2.70 | 1.60 | 4.00 | | | | 4.00 | | | | 4.00 | | | | 4.00 | | | | 8.0 |
| 9.0 | 4.00 | 4.00 | 2.55 | 1.55 | 4.00 | | | | 4.00 | | | | 4.00 | | | | 4.00 | | | | 9.0 |
| 10.0 | 4.00 | 3.90 | 2.45 | 1.50 | 4.00 | 4.00 | | | 4.00 | 4.00 | | | 4.00 | | | | 4.00 | | | | 10.0 |
| 11.0 | 4.00 | 3.70 | 2.35 | | 4.00 | 4.00 | | | 4.00 | 4.00 | | | 4.00 | 4.00 | | | 4.00 | | | | 11.0 |
| 12.0 | 4.00 | 3.50 | 2.30 | | 4.00 | 4.00 | 2.65 | 1.55 | 4.00 | 4.00 | 2.65 | | 4.00 | 3.95 | | | 4.00 | 3.70 | | | 12.0 |
| 13.0 | 4.00 | 3.35 | | | 4.00 | 4.00 | 2.60 | 1.50 | 4.00 | 3.90 | 2.60 | 1.50 | 4.00 | 3.80 | 2.60 | | 3.95 | 3.55 | | | 13.0 |
| 14.0 | 4.00 | 3.20 | | | 4.00 | 3.85 | 2.55 | 1.50 | 4.00 | 3.75 | 2.55 | 1.50 | 4.00 | 3.65 | 2.55 | 1.50 | 3.85 | 3.45 | 2.60 | 1.50 | 14.0 |
| 16.0 | | | | | 4.00 | 3.60 | 2.45 | 1.45 | 3.95 | 3.50 | 2.45 | 1.45 | 3.85 | 3.40 | 2.45 | 1.45 | 3.55 | 3.20 | 2.50 | 1.45 | 16.0 |
| 18.0 | | | | | 3.75 | 3.35 | 2.35 | 1.40 | 3.65 | 3.25 | 2.35 | 1.40 | 3.55 | 3.20 | 2.40 | 1.40 | 3.30 | 3.05 | 2.40 | 1.40 | 18.0 |
| 20.0 | | | | | 3.50 | 3.15 | 2.25 | 1.40 | 3.40 | 3.05 | 2.30 | 1.40 | 3.30 | 3.00 | 2.30 | 1.40 | 3.05 | 2.85 | 2.30 | 1.40 | 20.0 |
| 22.0 | | | | | 3.25 | 2.95 | 2.20 | 1.35 | 3.20 | 2.90 | 2.20 | 1.35 | 3.10 | 2.80 | 2.25 | 1.35 | 2.70 | 2.60 | 2.25 | 1.35 | 22.0 |
| 24.0 | | | | | 3.05 | 2.80 | 2.15 | | 2.95 | 2.75 | 2.15 | 1.35 | 2.90 | 2.65 | 2.15 | 1.35 | 2.35 | 2.25 | 2.20 | 1.35 | 24.0 |
| 26.0 | | | | | 2.85 | 2.65 | 2.10 | | 2.80 | 2.60 | 2.10 | | 2.70 | 2.55 | 2.10 | | 2.00 | 1.95 | 1.95 | 1.30 | 26.0 |
| 28.0 | | | | | 2.60 | 2.55 | 2.05 | | 2.60 | 2.45 | 2.05 | | 2.45 | 2.40 | 2.05 | | 1.75 | 1.70 | 1.75 | | 28.0 |
| 30.0 | | | | | 2.35 | 2.40 | 2.00 | | 2.20 | 2.35 | 2.00 | | 1.95 | 2.20 | 2.00 | | 1.50 | 1.50 | 1.50 | | 30.0 |
| 32.0 | | | | | 1.95 | 2.10 | | | 1.80 | 2.00 | 2.00 | | 1.55 | 1.75 | 1.90 | | 1.30 | 1.30 | 1.30 | | 32.0 |
| 34.0 | | | | | 1.55 | 1.70 | | | 1.40 | 1.60 | | | 1.15 | 1.35 | 1.45 | | 1.10 | 1.10 | 1.15 | | 34.0 |
| 36.0 | | | | | 1.25 | 1.35 | | | 1.10 | 1.25 | | | 0.85 | 1.00 | | | 0.80 | 0.95 | 0.95 | | 36.0 |
| 38.0 | | | | | 0.95 | 1.05 | | | 0.80 | 0.90 | | | 0.55 | 0.70 | | | 0.55 | 0.70 | | | 38.0 |
| 40.0 | | | | | 0.70 | | | | 0.55 | 0.65 | | | | 0.45 | | | | 0.40 | | | 40.0 |
| 42.0 | | | | | 0.45 | | | | | 0.40 | | | | | | | | | | | 42.0 |
| 44.0 | | | | | | | | | | | | | | | | | | | | | 44.0 |
| 46.0 | | | | | | | | | | | | | | | | | | | | | 46.0 |
| 48.0 | | | | | | | | | | | | | | | | | | | | | 48.0 |
| 50.0 | | | | | | | | | | | | | | | | | | | | | 50.0 |
| 52.0 | | | | | | | | | | | | | | | | | | | | | 52.0 |
| 54.0 | | | | | | | | | | | | | | | | | | | | | 54.0 |
| 55.0 | | | | | | | | | | | | | | | | | | | | | 55.0 |
| 56.0 | | | | | | | | | | | | | | | | | | | | | 56.0 |
| 1 | 0 | 0 | 0 | 0 | 0 | 0 | 0 | 0 | 46 | 46 | 46 | 46 | 92 | 92 | 92 | 92 | 100 | 100 | 100 | 100 | 1 |
| 2 | 0 | 0 | 0 | 0 | 92 | 92 | 92 | 92 | 92 | 92 | 92 | 92 | 92 | 92 | 92 | 92 | 100 | 100 | 100 | 100 | 2 |
| 3 | 0 | 0 | 0 | 0 | 92 | 92 | 92 | 92 | 92 | 92 | 92 | 92 | 92 | 92 | 92 | 92 | 100 | 100 | 100 | 100 | 3 |
| 4 | 0 | 0 | 0 | 0 | 92 | 92 | 92 | 92 | 92 | 92 | 92 | 92 | 92 | 92 | 92 | 92 | 100 | 100 | 100 | 100 | 4 |
| 5 | 0 | 0 | 0 | 0 | 92 | 92 | 92 | 92 | 92 | 92 | 92 | 92 | 92 | 92 | 92 | 92 | 100 | 100 | 100 | 100 | 5 |
| ID | 1 | 1 | 1 | 1 | 9 | 9 | 9 | 9 | 10 | 10 | 10 | 10 | 11 | 11 | 11 | 11 | 22 | 22 | 22 | 22 | ID |
| [DEG] | 28～84 | 35～84 | 54～84 | 68～84 | 18～84 | 35～84 | 54～84 | 68～84 | 35～84 | 33～84 | 54～84 | 67～84 | 44～84 | 45～84 | 55～84 | 69～84 | 48～84 | 48～84 | 55～84 | 68～84 | [DEG] |
| | 1 | 1 | 1 | 1 | 1 | 1 | 1 | 1 | 1 | 1 | 1 | 1 | 1 | 1 | 1 | 1 | 1 | 1 | 1 | 1 | |
| | 5t | 5t | 5t | 5t | 5t | 5t | 5t | 5t | 5t | 5t | 5t | 5t | 5t | 5t | 5t | 5t | 5t | 5t | 5t | 5t | |

| FAJ | 13.1m | 4.0 t | 7.6m | 360 ° | JPN |
|---|---|---|---|---|---|

| m | 10.2 | 10.2 | 10.2 | 10.2 | 38.2 | 38.2 | 38.2 | 38.2 | 41.7 | 41.7 | 41.7 | 41.7 | 45.2 | 45.2 | 45.2 | 45.2 | 48.0 | 48.0 | 48.0 | 48.0 | m |
|---|---|---|---|---|---|---|---|---|---|---|---|---|---|---|---|---|---|---|---|---|---|
| ° | 5 | 25 | 45 | 60 | 5 | 25 | 45 | 60 | 5 | 25 | 45 | 60 | 5 | 25 | 45 | 60 | 5 | 25 | 45 | 60 | ° |
| 2.0 | 2.80 | | | | | | | | | | | | | | | | | | | | 2.0 |
| 3.0 | 2.80 | | | | | | | | | | | | | | | | | | | | 3.0 |
| 4.0 | 2.80 | | | | | | | | | | | | | | | | | | | | 4.0 |
| 5.0 | 2.80 | | | | | | | | | | | | | | | | | | | | 5.0 |
| 6.0 | 2.80 | | | | | | | | | | | | | | | | | | | | 6.0 |
| 7.0 | 2.80 | 2.60 | | | | | | | | | | | | | | | | | | | 7.0 |
| 8.0 | 2.80 | 2.45 | | | 2.80 | | | | 2.80 | | | | | | | | | | | | 8.0 |
| 9.0 | 2.80 | 2.30 | | | 2.80 | | | | 2.80 | | | | 2.80 | | | | | | | | 9.0 |
| 10.0 | 2.65 | 2.20 | 1.75 | | 2.80 | | | | 2.80 | | | | 2.80 | | | | 2.65 | | | | 10.0 |
| 11.0 | 2.50 | 2.10 | 1.65 | | 2.80 | | | | 2.80 | | | | 2.80 | | | | 2.65 | | | | 11.0 |
| 12.0 | 2.35 | 2.00 | 1.55 | 0.90 | 2.80 | | | | 2.80 | | | | 2.75 | | | | 2.60 | | | | 12.0 |
| 13.0 | 2.25 | 1.95 | 1.50 | 0.85 | 2.80 | 2.20 | | | 2.80 | 2.20 | | | 2.70 | | | | 2.55 | | | | 13.0 |
| 14.0 | 2.10 | 1.85 | 1.45 | 0.85 | 2.80 | 2.15 | | | 2.75 | 2.15 | | | 2.65 | 2.15 | | | 2.55 | | | | 14.0 |
| 16.0 | 1.95 | 1.75 | 1.35 | | 2.70 | 2.05 | 1.55 | | 2.65 | 2.05 | 1.55 | | 2.60 | 2.05 | | | 2.45 | 2.05 | | | 16.0 |
| 18.0 | 1.80 | 1.65 | | | 2.55 | 2.00 | 1.50 | 0.80 | 2.55 | 2.00 | 1.50 | 0.80 | 2.50 | 2.00 | 1.50 | 0.80 | 2.40 | 1.95 | 1.50 | | 18.0 |
| 20.0 | 1.70 | | | | 2.45 | 1.90 | 1.40 | 0.80 | 2.45 | 1.90 | 1.45 | 0.80 | 2.45 | 1.90 | 1.45 | 0.80 | 2.35 | 1.90 | 1.45 | 0.80 | 20.0 |
| 22.0 | | | | | 2.30 | 1.85 | 1.35 | 0.75 | 2.35 | 1.85 | 1.35 | 0.75 | 2.35 | 1.85 | 1.40 | 0.75 | 2.30 | 1.85 | 1.40 | 0.75 | 22.0 |
| 24.0 | | | | | 2.20 | 1.80 | 1.30 | 0.75 | 2.25 | 1.80 | 1.35 | 0.75 | 2.25 | 1.80 | 1.35 | 0.75 | 2.25 | 1.80 | 1.35 | 0.75 | 24.0 |
| 26.0 | | | | | 2.10 | 1.75 | 1.25 | 0.75 | 2.15 | 1.75 | 1.30 | 0.75 | 2.15 | 1.75 | 1.30 | 0.75 | 2.00 | 1.75 | 1.30 | 0.75 | 26.0 |
| 28.0 | | | | | 2.00 | 1.70 | 1.25 | | 2.05 | 1.70 | 1.25 | 0.75 | 2.10 | 1.75 | 1.25 | 0.70 | 1.75 | 1.75 | 1.25 | 0.70 | 28.0 |
| 30.0 | | | | | 1.95 | 1.70 | 1.20 | | 2.00 | 1.70 | 1.20 | | 2.00 | 1.70 | 1.20 | 0.70 | 1.55 | 1.55 | 1.20 | 0.70 | 30.0 |
| 32.0 | | | | | 1.90 | 1.65 | 1.20 | | 1.90 | 1.65 | 1.20 | | 1.90 | 1.65 | 1.20 | | 1.35 | 1.35 | 1.20 | | 32.0 |
| 34.0 | | | | | 1.80 | 1.60 | 1.15 | | 1.80 | 1.65 | 1.15 | | 1.55 | 1.65 | 1.15 | | 1.15 | 1.20 | 1.15 | | 34.0 |
| 36.0 | | | | | 1.60 | 1.60 | | | 1.45 | 1.60 | 1.15 | | 1.20 | 1.50 | 1.15 | | 1.00 | 1.00 | 1.05 | | 36.0 |
| 38.0 | | | | | 1.30 | 1.50 | | | 1.15 | 1.35 | | | 0.90 | 1.15 | 1.10 | | 0.85 | 0.90 | 0.90 | | 38.0 |
| 40.0 | | | | | 1.05 | 1.20 | | | 0.90 | 1.10 | | | 0.65 | 0.90 | 1.00 | | 0.60 | 0.75 | 0.80 | | 40.0 |
| 42.0 | | | | | 0.80 | 0.95 | | | 0.65 | 0.80 | | | | 0.60 | | | 0.40 | 0.60 | | | 42.0 |
| 44.0 | | | | | 0.60 | | | | | 0.60 | | | | | | | | | | | 44.0 |
| 46.0 | | | | | | | | | | | | | | | | | | | | | 46.0 |
| 48.0 | | | | | | | | | | | | | | | | | | | | | 48.0 |
| 50.0 | | | | | | | | | | | | | | | | | | | | | 50.0 |
| 52.0 | | | | | | | | | | | | | | | | | | | | | 52.0 |
| 54.0 | | | | | | | | | | | | | | | | | | | | | 54.0 |
| 55.0 | | | | | | | | | | | | | | | | | | | | | 55.0 |
| 56.0 | | | | | | | | | | | | | | | | | | | | | 56.0 |
| 1 | 0 | 0 | 0 | 0 | 0 | 0 | 0 | 0 | 46 | 46 | 46 | 46 | 92 | 92 | 92 | 92 | 100 | 100 | 100 | 100 | 1 |
| 2 | 0 | 0 | 0 | 0 | 92 | 92 | 92 | 92 | 92 | 92 | 92 | 92 | 92 | 92 | 92 | 92 | 100 | 100 | 100 | 100 | 2 |
| 3 | 0 | 0 | 0 | 0 | 92 | 92 | 92 | 92 | 92 | 92 | 92 | 92 | 92 | 92 | 92 | 92 | 100 | 100 | 100 | 100 | 3 |
| 4 | 0 | 0 | 0 | 0 | 92 | 92 | 92 | 92 | 92 | 92 | 92 | 92 | 92 | 92 | 92 | 92 | 100 | 100 | 100 | 100 | 4 |
| 5 | 0 | 0 | 0 | 0 | 92 | 92 | 92 | 92 | 92 | 92 | 92 | 92 | 92 | 92 | 92 | 92 | 100 | 100 | 100 | 100 | 5 |
| ID | 1 | 1 | 1 | 1 | 9 | 9 | 9 | 9 | 10 | 10 | 10 | 10 | 11 | 11 | 11 | 11 | 22 | 22 | 22 | 22 | ID |
| [DEG] | 0～84 | 40～84 | 57～84 | 71～84 | 28～84 | 38～84 | 56～84 | 69～84 | 39～84 | 41～84 | 57～84 | 68～84 | 48～84 | 49～84 | 54～84 | 68～84 | 48～84 | 52～84 | 57～84 | 70～84 | [DEG] |
| | 1 | 1 | 1 | 1 | 1 | 1 | 1 | 1 | 1 | 1 | 1 | 1 | 1 | 1 | 1 | 1 | 1 | 1 | 1 | 1 | |
| | 5t | 5t | 5t | 5t | 5t | 5t | 5t | 5t | 5t | 5t | 5t | 5t | 5t | 5t | 5t | 5t | 5t | 5t | 5t | 5t | |

| FAJ | 17.7m | 4.0 t | 7.6m | 360 ° | JPN |
|---|---|---|---|---|---|

| m | 10.2 | 10.2 | 10.2 | 10.2 | 38.2 | 38.2 | 38.2 | 38.2 | 41.7 | 41.7 | 41.7 | 41.7 | 45.2 | 45.2 | 45.2 | 45.2 | 48.0 | 48.0 | 48.0 | 48.0 | m |
|---|---|---|---|---|---|---|---|---|---|---|---|---|---|---|---|---|---|---|---|---|---|
| ° | 5 | 25 | 45 | 60 | 5 | 25 | 45 | 60 | 5 | 25 | 45 | 60 | 5 | 25 | 45 | 60 | 5 | 25 | 45 | 60 | ° |
| 2.0 | | | | | | | | | | | | | | | | | | | | | 2.0 |
| 3.0 | 1.50 | | | | | | | | | | | | | | | | | | | | 3.0 |
| 4.0 | 1.50 | | | | | | | | | | | | | | | | | | | | 4.0 |
| 5.0 | 1.50 | | | | | | | | | | | | | | | | | | | | 5.0 |
| 6.0 | 1.50 | | | | | | | | | | | | | | | | | | | | 6.0 |
| 7.0 | 1.50 | | | | | | | | | | | | | | | | | | | | 7.0 |
| 8.0 | 1.50 | | | | 1.50 | | | | | | | | | | | | | | | | 8.0 |
| 9.0 | 1.50 | 1.25 | | | 1.50 | | | | 1.50 | | | | 1.45 | | | | | | | | 9.0 |
| 10.0 | 1.45 | 1.15 | | | 1.50 | | | | 1.50 | | | | 1.45 | | | | 1.35 | | | | 10.0 |
| 11.0 | 1.35 | 1.10 | | | 1.50 | | | | 1.45 | | | | 1.40 | | | | 1.35 | | | | 11.0 |
| 12.0 | 1.25 | 1.05 | | | 1.45 | | | | 1.45 | | | | 1.40 | | | | 1.35 | | | | 12.0 |
| 13.0 | 1.20 | 1.00 | | | 1.45 | | | | 1.40 | | | | 1.35 | | | | 1.30 | | | | 13.0 |
| 14.0 | 1.15 | 0.95 | 0.85 | | 1.40 | | | | 1.40 | | | | 1.35 | | | | 1.30 | | | | 14.0 |
| 16.0 | 1.00 | 0.90 | 0.80 | 0.55 | 1.35 | 1.00 | | | 1.30 | 1.00 | | | 1.30 | 1.00 | | | 1.25 | | | | 16.0 |
| 18.0 | 0.95 | 0.85 | 0.75 | 0.50 | 1.30 | 0.95 | | | 1.25 | 0.95 | | | 1.25 | 0.95 | | | 1.20 | 0.95 | | | 18.0 |
| 20.0 | 0.85 | 0.80 | 0.75 | 0.50 | 1.20 | 0.90 | 0.75 | | 1.20 | 0.90 | 0.75 | | 1.20 | 0.90 | | | 1.15 | 0.90 | | | 20.0 |
| 22.0 | 0.80 | 0.75 | 0.70 | | 1.15 | 0.90 | 0.75 | 0.50 | 1.15 | 0.90 | 0.75 | 0.50 | 1.15 | 0.90 | 0.75 | | 1.15 | 0.90 | 0.75 | | 22.0 |
| 24.0 | 0.75 | 0.75 | | | 1.10 | 0.85 | 0.70 | 0.45 | 1.10 | 0.85 | 0.70 | 0.45 | 1.10 | 0.85 | 0.70 | 0.45 | 1.10 | 0.85 | 0.70 | 0.45 | 24.0 |
| 26.0 | | | | | 1.05 | 0.85 | 0.70 | 0.45 | 1.05 | 0.85 | 0.70 | 0.45 | 1.05 | 0.85 | 0.70 | 0.45 | 1.05 | 0.85 | 0.70 | 0.45 | 26.0 |
| 28.0 | | | | | 1.00 | 0.80 | 0.70 | 0.45 | 1.00 | 0.80 | 0.70 | 0.45 | 1.05 | 0.80 | 0.70 | 0.45 | 1.00 | 0.80 | 0.70 | 0.45 | 28.0 |
| 30.0 | | | | | 0.95 | 0.80 | 0.70 | 0.45 | 0.95 | 0.80 | 0.70 | 0.45 | 1.00 | 0.80 | 0.70 | 0.45 | 1.00 | 0.80 | 0.70 | 0.45 | 30.0 |
| 32.0 | | | | | 0.90 | 0.75 | 0.70 | | 0.95 | 0.75 | 0.70 | 0.40 | 0.95 | 0.75 | 0.70 | 0.40 | 0.95 | 0.75 | 0.70 | 0.40 | 32.0 |
| 34.0 | | | | | 0.85 | 0.75 | 0.70 | | 0.90 | 0.75 | 0.70 | | 0.90 | 0.75 | 0.70 | 0.40 | 0.90 | 0.75 | 0.70 | 0.40 | 34.0 |
| 36.0 | | | | | 0.85 | 0.75 | 0.70 | | 0.85 | 0.75 | 0.70 | | 0.90 | 0.75 | 0.70 | | 0.90 | 0.75 | 0.65 | 0.40 | 36.0 |
| 38.0 | | | | | 0.80 | 0.70 | 0.70 | | 0.85 | 0.70 | 0.70 | | 0.85 | 0.70 | 0.65 | | 0.85 | 0.70 | 0.65 | | 38.0 |
| 40.0 | | | | | 0.80 | 0.70 | 0.70 | | 0.80 | 0.70 | 0.70 | | 0.80 | 0.70 | 0.65 | | 0.75 | 0.70 | 0.65 | | 40.0 |
| 42.0 | | | | | 0.75 | 0.70 | | | 0.80 | 0.70 | 0.70 | | 0.75 | 0.70 | 0.65 | | 0.65 | 0.70 | 0.65 | | 42.0 |
| 44.0 | | | | | 0.75 | 0.70 | | | 0.75 | 0.70 | | | 0.50 | 0.70 | 0.65 | | 0.45 | 0.60 | 0.65 | | 44.0 |
| 46.0 | | | | | 0.70 | 0.70 | | | 0.55 | 0.70 | | | | 0.55 | | | | 0.50 | 0.55 | | 46.0 |
| 48.0 | | | | | 0.55 | 0.65 | | | 0.40 | 0.55 | | | | | | | | | | | 48.0 |
| 50.0 | | | | | 0.40 | | | | | | | | | | | | | | | | 50.0 |
| 52.0 | | | | | | | | | | | | | | | | | | | | | 52.0 |
| 54.0 | | | | | | | | | | | | | | | | | | | | | 54.0 |
| 55.0 | | | | | | | | | | | | | | | | | | | | | 55.0 |
| 56.0 | | | | | | | | | | | | | | | | | | | | | 56.0 |
| 1 | 0 | 0 | 0 | 0 | 0 | 0 | 0 | 0 | 46 | 46 | 46 | 46 | 92 | 92 | 92 | 92 | 100 | 100 | 100 | 100 | 1 |
| 2 | 0 | 0 | 0 | 0 | 92 | 92 | 92 | 92 | 92 | 92 | 92 | 92 | 92 | 92 | 92 | 92 | 100 | 100 | 100 | 100 | 2 |
| 3 | 0 | 0 | 0 | 0 | 92 | 92 | 92 | 92 | 92 | 92 | 92 | 92 | 92 | 92 | 92 | 92 | 100 | 100 | 100 | 100 | 3 |
| 4 | 0 | 0 | 0 | 0 | 92 | 92 | 92 | 92 | 92 | 92 | 92 | 92 | 92 | 92 | 92 | 92 | 100 | 100 | 100 | 100 | 4 |
| 5 | 0 | 0 | 0 | 0 | 92 | 92 | 92 | 92 | 92 | 92 | 92 | 92 | 92 | 92 | 92 | 92 | 100 | 100 | 100 | 100 | 5 |
| ID | 1 | 1 | 1 | 1 | 9 | 9 | 9 | 9 | 10 | 10 | 10 | 10 | 11 | 11 | 11 | 11 | 22 | 22 | 22 | 22 | ID |
| [DEG] | 19～84 | 31～84 | 51～84 | 65～84 | 25～84 | 37～84 | 54～84 | 71～84 | 38～84 | 43～84 | 55～84 | 70～84 | 49～84 | 52～84 | 57～84 | 69～84 | 51～84 | 54～84 | 57～84 | 68～84 | [DEG] |
| | 1 | 1 | 1 | 1 | 1 | 1 | 1 | 1 | 1 | 1 | 1 | 1 | 1 | 1 | 1 | 1 | 1 | 1 | 1 | 1 | |
| | 5t | 5t | 5t | 5t | 5t | 5t | 5t | 5t | 5t | 5t | 5t | 5t | 5t | 5t | 5t | 5t | 5t | 5t | 5t | 5t | |

# フルオートジブ

| FAJ | 8.4m | 4.0 t | 7.2m | 360 ° | JPN |
|---|---|---|---|---|---|

| m | 10.2 | 10.2 | 10.2 | 10.2 | 38.2 | 38.2 | 38.2 | 38.2 | 41.7 | 41.7 | 41.7 | 41.7 | 45.2 | 45.2 | 45.2 | 45.2 | 48.0 | 48.0 | 48.0 | 48.0 | m |
|---|---|---|---|---|---|---|---|---|---|---|---|---|---|---|---|---|---|---|---|---|---|
| ° | 5 | 25 | 45 | 60 | 5 | 25 | 45 | 60 | 5 | 25 | 45 | 60 | 5 | 25 | 45 | 60 | 5 | 25 | 45 | 60 | ° |
| 2.0 | 4.00 | | | | | | | | | | | | | | | | | | | | 2.0 |
| 3.0 | 4.00 | | | | | | | | | | | | | | | | | | | | 3.0 |
| 4.0 | 4.00 | 4.00 | | | | | | | | | | | | | | | | | | | 4.0 |
| 5.0 | 4.00 | 4.00 | | | | | | | | | | | | | | | | | | | 5.0 |
| 6.0 | 4.00 | 4.00 | 3.00 | | | | | | | | | | | | | | | | | | 6.0 |
| 7.0 | 4.00 | 4.00 | 2.85 | | 4.00 | | | | 4.00 | | | | | | | | | | | | 7.0 |
| 8.0 | 4.00 | 4.00 | 2.70 | 1.60 | 4.00 | | | | 4.00 | | | | 4.00 | | | | 4.00 | | | | 8.0 |
| 9.0 | 4.00 | 4.00 | 2.55 | 1.55 | 4.00 | | | | 4.00 | | | | 4.00 | | | | 4.00 | | | | 9.0 |
| 10.0 | 4.00 | 3.90 | 2.45 | 1.50 | 4.00 | 4.00 | | | 4.00 | 4.00 | | | 4.00 | | | | 4.00 | | | | 10.0 |
| 11.0 | 4.00 | 3.70 | 2.35 | | 4.00 | 4.00 | | | 4.00 | 4.00 | | | 4.00 | 4.00 | | | 4.00 | | | | 11.0 |
| 12.0 | 4.00 | 3.50 | 2.30 | | 4.00 | 4.00 | 2.65 | 1.55 | 4.00 | 4.00 | 2.65 | | 4.00 | 3.95 | | | 4.00 | 3.70 | | | 12.0 |
| 13.0 | 4.00 | 3.35 | | | 4.00 | 4.00 | 2.60 | 1.50 | 4.00 | 3.90 | 2.60 | 1.50 | 4.00 | 3.80 | 2.60 | | 3.95 | 3.55 | | | 13.0 |
| 14.0 | 4.00 | 3.20 | | | 4.00 | 3.85 | 2.55 | 1.50 | 4.00 | 3.75 | 2.55 | 1.50 | 4.00 | 3.65 | 2.55 | 1.50 | 3.85 | 3.45 | 2.60 | 1.50 | 14.0 |
| 16.0 | | | | | 4.00 | 3.60 | 2.45 | 1.45 | 3.95 | 3.50 | 2.45 | 1.45 | 3.85 | 3.40 | 2.45 | 1.45 | 3.55 | 3.20 | 2.50 | 1.45 | 16.0 |
| 18.0 | | | | | 3.75 | 3.35 | 2.35 | 1.40 | 3.65 | 3.25 | 2.35 | 1.40 | 3.55 | 3.20 | 2.40 | 1.40 | 3.30 | 3.05 | 2.40 | 1.40 | 18.0 |
| 20.0 | | | | | 3.50 | 3.15 | 2.25 | 1.40 | 3.40 | 3.05 | 2.30 | 1.40 | 3.30 | 3.00 | 2.30 | 1.40 | 3.05 | 2.85 | 2.30 | 1.40 | 20.0 |
| 22.0 | | | | | 3.25 | 2.95 | 2.20 | 1.35 | 3.20 | 2.90 | 2.20 | 1.35 | 3.10 | 2.80 | 2.25 | 1.35 | 2.70 | 2.60 | 2.25 | 1.35 | 22.0 |
| 24.0 | | | | | 3.05 | 2.80 | 2.15 | | 2.95 | 2.75 | 2.15 | 1.35 | 2.90 | 2.65 | 2.15 | 1.35 | 2.35 | 2.25 | 2.20 | 1.35 | 24.0 |
| 26.0 | | | | | 2.85 | 2.65 | 2.10 | | 2.80 | 2.60 | 2.10 | | 2.70 | 2.55 | 2.10 | | 2.00 | 1.95 | 1.95 | 1.30 | 26.0 |
| 28.0 | | | | | 2.55 | 2.55 | 2.05 | | 2.40 | 2.45 | 2.05 | | 2.15 | 2.40 | 2.05 | | 1.75 | 1.70 | 1.75 | | 28.0 |
| 30.0 | | | | | 2.10 | 2.25 | 2.00 | | 1.90 | 2.15 | 2.00 | | 1.70 | 1.95 | 2.00 | | 1.50 | 1.50 | 1.50 | | 30.0 |
| 32.0 | | | | | 1.70 | 1.85 | | | 1.50 | 1.70 | 1.80 | | 1.30 | 1.50 | 1.65 | | 1.25 | 1.30 | 1.30 | | 32.0 |
| 34.0 | | | | | 1.30 | 1.45 | | | 1.15 | 1.35 | | | 0.95 | 1.10 | 1.20 | | 0.90 | 1.10 | 1.15 | | 34.0 |
| 36.0 | | | | | 1.00 | 1.10 | | | 0.85 | 1.00 | | | 0.60 | 0.80 | | | 0.60 | 0.75 | 0.85 | | 36.0 |
| 38.0 | | | | | 0.75 | 0.80 | | | 0.60 | 0.70 | | | | 0.50 | | | | 0.45 | | | 38.0 |
| 40.0 | | | | | 0.50 | | | | | 0.45 | | | | | | | | | | | 40.0 |
| 42.0 | | | | | | | | | | | | | | | | | | | | | 42.0 |
| 44.0 | | | | | | | | | | | | | | | | | | | | | 44.0 |
| 46.0 | | | | | | | | | | | | | | | | | | | | | 46.0 |
| 48.0 | | | | | | | | | | | | | | | | | | | | | 48.0 |
| 50.0 | | | | | | | | | | | | | | | | | | | | | 50.0 |
| 52.0 | | | | | | | | | | | | | | | | | | | | | 52.0 |
| 54.0 | | | | | | | | | | | | | | | | | | | | | 54.0 |
| 55.0 | | | | | | | | | | | | | | | | | | | | | 55.0 |
| 56.0 | | | | | | | | | | | | | | | | | | | | | 56.0 |
| 1 | 0 | 0 | 0 | 0 | 0 | 0 | 0 | 0 | 46 | 46 | 46 | 46 | 92 | 92 | 92 | 92 | 100 | 100 | 100 | 100 | 1 |
| 2 | 0 | 0 | 0 | 0 | 92 | 92 | 92 | 92 | 92 | 92 | 92 | 92 | 92 | 92 | 92 | 92 | 100 | 100 | 100 | 100 | 2 |
| 3 | 0 | 0 | 0 | 0 | 92 | 92 | 92 | 92 | 92 | 92 | 92 | 92 | 92 | 92 | 92 | 92 | 100 | 100 | 100 | 100 | 3 |
| 4 | 0 | 0 | 0 | 0 | 92 | 92 | 92 | 92 | 92 | 92 | 92 | 92 | 92 | 92 | 92 | 92 | 100 | 100 | 100 | 100 | 4 |
| 5 | 0 | 0 | 0 | 0 | 92 | 92 | 92 | 92 | 92 | 92 | 92 | 92 | 92 | 92 | 92 | 92 | 100 | 100 | 100 | 100 | 5 |
| ID | 1 | 1 | 1 | 1 | 9 | 9 | 9 | 9 | 10 | 10 | 10 | 10 | 11 | 11 | 11 | 11 | 22 | 22 | 22 | 22 | ID |
| [DEG] | 28～84 | 35～84 | 54～84 | 68～84 | 26～84 | 35～84 | 54～84 | 68～84 | 39～84 | 38～84 | 54～84 | 67～84 | 47～84 | 48～84 | 55～84 | 69～84 | 50～84 | 51～84 | 55～84 | 68～84 | [DEG] |
| | 1 | 1 | 1 | 1 | 1 | 1 | 1 | 1 | 1 | 1 | 1 | 1 | 1 | 1 | 1 | 1 | 1 | 1 | 1 | 1 | |
| | 5t | 5t | 5t | 5t | 5t | 5t | 5t | 5t | 5t | 5t | 5t | 5t | 5t | 5t | 5t | 5t | 5t | 5t | 5t | 5t | |

| FAJ | 13.1m | 4.0 t | 7.2m | 360 ° | JPN |
|---|---|---|---|---|---|

| m | 10.2 | 10.2 | 10.2 | 10.2 | 38.2 | 38.2 | 38.2 | 38.2 | 41.7 | 41.7 | 41.7 | 41.7 | 45.2 | 45.2 | 45.2 | 45.2 | 48.0 | 48.0 | 48.0 | 48.0 | m |
|---|---|---|---|---|---|---|---|---|---|---|---|---|---|---|---|---|---|---|---|---|---|
| ° | 5 | 25 | 45 | 60 | 5 | 25 | 45 | 60 | 5 | 25 | 45 | 60 | 5 | 25 | 45 | 60 | 5 | 25 | 45 | 60 | ° |
| 2.0 | 2.80 | | | | | | | | | | | | | | | | | | | | 2.0 |
| 3.0 | 2.80 | | | | | | | | | | | | | | | | | | | | 3.0 |
| 4.0 | 2.80 | | | | | | | | | | | | | | | | | | | | 4.0 |
| 5.0 | 2.80 | | | | | | | | | | | | | | | | | | | | 5.0 |
| 6.0 | 2.80 | | | | | | | | | | | | | | | | | | | | 6.0 |
| 7.0 | 2.80 | 2.60 | | | | | | | | | | | | | | | | | | | 7.0 |
| 8.0 | 2.80 | 2.45 | | | 2.80 | | | | 2.80 | | | | | | | | | | | | 8.0 |
| 9.0 | 2.80 | 2.30 | | | 2.80 | | | | 2.80 | | | | 2.80 | | | | | | | | 9.0 |
| 10.0 | 2.65 | 2.20 | 1.75 | | 2.80 | | | | 2.80 | | | | 2.80 | | | | 2.65 | | | | 10.0 |
| 11.0 | 2.50 | 2.10 | 1.65 | | 2.80 | | | | 2.80 | | | | 2.80 | | | | 2.65 | | | | 11.0 |
| 12.0 | 2.35 | 2.00 | 1.55 | 0.90 | 2.80 | | | | 2.80 | | | | 2.75 | | | | 2.60 | | | | 12.0 |
| 13.0 | 2.25 | 1.95 | 1.50 | 0.85 | 2.80 | 2.20 | | | 2.80 | 2.20 | | | 2.70 | | | | 2.55 | | | | 13.0 |
| 14.0 | 2.10 | 1.85 | 1.45 | 0.85 | 2.80 | 2.15 | | | 2.75 | 2.15 | | | 2.65 | 2.15 | | | 2.55 | | | | 14.0 |
| 16.0 | 1.95 | 1.75 | 1.35 | | 2.70 | 2.05 | 1.55 | | 2.65 | 2.05 | 1.55 | | 2.60 | 2.05 | | | 2.45 | 2.05 | | | 16.0 |
| 18.0 | 1.80 | 1.65 | | | 2.55 | 2.00 | 1.50 | 0.80 | 2.55 | 2.00 | 1.50 | 0.80 | 2.50 | 2.00 | 1.50 | 0.80 | 2.40 | 1.95 | 1.50 | | 18.0 |
| 20.0 | 1.70 | | | | 2.45 | 1.90 | 1.40 | 0.80 | 2.45 | 1.90 | 1.45 | 0.80 | 2.45 | 1.90 | 1.45 | 0.80 | 2.35 | 1.90 | 1.45 | 0.80 | 20.0 |
| 22.0 | | | | | 2.30 | 1.85 | 1.35 | 0.75 | 2.35 | 1.85 | 1.35 | 0.75 | 2.35 | 1.85 | 1.40 | 0.75 | 2.30 | 1.85 | 1.40 | 0.75 | 22.0 |
| 24.0 | | | | | 2.20 | 1.80 | 1.30 | 0.75 | 2.25 | 1.80 | 1.35 | 0.75 | 2.25 | 1.80 | 1.35 | 0.75 | 2.25 | 1.80 | 1.35 | 0.75 | 24.0 |
| 26.0 | | | | | 2.10 | 1.75 | 1.25 | 0.75 | 2.15 | 1.75 | 1.30 | 0.75 | 2.15 | 1.75 | 1.30 | 0.75 | 2.00 | 1.75 | 1.30 | 0.75 | 26.0 |
| 28.0 | | | | | 2.00 | 1.70 | 1.25 | | 2.05 | 1.70 | 1.25 | 0.75 | 2.10 | 1.75 | 1.25 | 0.70 | 1.75 | 1.75 | 1.25 | 0.70 | 28.0 |
| 30.0 | | | | | 1.95 | 1.70 | 1.20 | | 2.00 | 1.70 | 1.20 | | 2.00 | 1.70 | 1.20 | 0.70 | 1.55 | 1.55 | 1.20 | 0.70 | 30.0 |
| 32.0 | | | | | 1.90 | 1.65 | 1.20 | | 1.90 | 1.65 | 1.20 | | 1.65 | 1.65 | 1.20 | | 1.35 | 1.35 | 1.20 | | 32.0 |
| 34.0 | | | | | 1.70 | 1.60 | 1.15 | | 1.55 | 1.65 | 1.15 | | 1.30 | 1.60 | 1.15 | | 1.15 | 1.20 | 1.15 | | 34.0 |
| 36.0 | | | | | 1.40 | 1.60 | | | 1.20 | 1.45 | 1.15 | | 1.00 | 1.25 | 1.15 | | 0.95 | 1.00 | 1.05 | | 36.0 |
| 38.0 | | | | | 1.10 | 1.30 | | | 0.95 | 1.15 | | | 0.70 | 0.95 | 1.10 | | 0.65 | 0.90 | 0.90 | | 38.0 |
| 40.0 | | | | | 0.85 | 1.00 | | | 0.70 | 0.90 | | | | 0.70 | 0.80 | | 0.40 | 0.65 | 0.80 | | 40.0 |
| 42.0 | | | | | 0.65 | 0.75 | | | | 0.65 | | | | | | | | 0.40 | | | 42.0 |
| 44.0 | | | | | | | | | | | | | | | | | | | | | 44.0 |
| 46.0 | | | | | | | | | | | | | | | | | | | | | 46.0 |
| 48.0 | | | | | | | | | | | | | | | | | | | | | 48.0 |
| 50.0 | | | | | | | | | | | | | | | | | | | | | 50.0 |
| 52.0 | | | | | | | | | | | | | | | | | | | | | 52.0 |
| 54.0 | | | | | | | | | | | | | | | | | | | | | 54.0 |
| 55.0 | | | | | | | | | | | | | | | | | | | | | 55.0 |
| 56.0 | | | | | | | | | | | | | | | | | | | | | 56.0 |
| 1 | 0 | 0 | 0 | 0 | 0 | 0 | 0 | 0 | 46 | 46 | 46 | 46 | 92 | 92 | 92 | 92 | 100 | 100 | 100 | 100 | 1 |
| 2 | 0 | 0 | 0 | 0 | 92 | 92 | 92 | 92 | 92 | 92 | 92 | 92 | 92 | 92 | 92 | 92 | 100 | 100 | 100 | 100 | 2 |
| 3 | 0 | 0 | 0 | 0 | 92 | 92 | 92 | 92 | 92 | 92 | 92 | 92 | 92 | 92 | 92 | 92 | 100 | 100 | 100 | 100 | 3 |
| 4 | 0 | 0 | 0 | 0 | 92 | 92 | 92 | 92 | 92 | 92 | 92 | 92 | 92 | 92 | 92 | 92 | 100 | 100 | 100 | 100 | 4 |
| 5 | 0 | 0 | 0 | 0 | 92 | 92 | 92 | 92 | 92 | 92 | 92 | 92 | 92 | 92 | 92 | 92 | 100 | 100 | 100 | 100 | 5 |
| ID | 1 | 1 | 1 | 1 | 9 | 9 | 9 | 9 | 10 | 10 | 10 | 10 | 11 | 11 | 11 | 11 | 22 | 22 | 22 | 22 | ID |
| [DEG] | 0～84 | 40～84 | 57～84 | 71～84 | 33～84 | 38～84 | 56～84 | 69～84 | 43～84 | 45～84 | 57～84 | 68～84 | 50～84 | 52～84 | 54～84 | 68～84 | 51～84 | 52～84 | 57～84 | 70～84 | [DEG] |
| | 1 | 1 | 1 | 1 | 1 | 1 | 1 | 1 | 1 | 1 | 1 | 1 | 1 | 1 | 1 | 1 | 1 | 1 | 1 | 1 | |
| | 5t | 5t | 5t | 5t | 5t | 5t | 5t | 5t | 5t | 5t | 5t | 5t | 5t | 5t | 5t | 5t | 5t | 5t | 5t | 5t | |

| FAJ | 17.7m | 4.0 t | 7.2m | 360 ° | JPN |
|---|---|---|---|---|---|

| m | 10.2 | 10.2 | 10.2 | 10.2 | 38.2 | 38.2 | 38.2 | 38.2 | 41.7 | 41.7 | 41.7 | 41.7 | 45.2 | 45.2 | 45.2 | 45.2 | 48.0 | 48.0 | 48.0 | 48.0 | m |
|---|---|---|---|---|---|---|---|---|---|---|---|---|---|---|---|---|---|---|---|---|---|
| ° | 5 | 25 | 45 | 60 | 5 | 25 | 45 | 60 | 5 | 25 | 45 | 60 | 5 | 25 | 45 | 60 | 5 | 25 | 45 | 60 | ° |
| 2.0 | | | | | | | | | | | | | | | | | | | | | 2.0 |
| 3.0 | 1.50 | | | | | | | | | | | | | | | | | | | | 3.0 |
| 4.0 | 1.50 | | | | | | | | | | | | | | | | | | | | 4.0 |
| 5.0 | 1.50 | | | | | | | | | | | | | | | | | | | | 5.0 |
| 6.0 | 1.50 | | | | | | | | | | | | | | | | | | | | 6.0 |
| 7.0 | 1.50 | | | | | | | | | | | | | | | | | | | | 7.0 |
| 8.0 | 1.50 | | | | 1.50 | | | | | | | | | | | | | | | | 8.0 |
| 9.0 | 1.50 | 1.25 | | | 1.50 | | | | 1.50 | | | | 1.45 | | | | | | | | 9.0 |
| 10.0 | 1.45 | 1.15 | | | 1.50 | | | | 1.50 | | | | 1.45 | | | | 1.35 | | | | 10.0 |
| 11.0 | 1.35 | 1.10 | | | 1.50 | | | | 1.45 | | | | 1.40 | | | | 1.35 | | | | 11.0 |
| 12.0 | 1.25 | 1.05 | | | 1.45 | | | | 1.45 | | | | 1.40 | | | | 1.35 | | | | 12.0 |
| 13.0 | 1.20 | 1.00 | | | 1.45 | | | | 1.40 | | | | 1.35 | | | | 1.30 | | | | 13.0 |
| 14.0 | 1.15 | 0.95 | 0.85 | | 1.40 | | | | 1.40 | | | | 1.35 | | | | 1.30 | | | | 14.0 |
| 16.0 | 1.00 | 0.90 | 0.80 | 0.55 | 1.35 | 1.00 | | | 1.30 | 1.00 | | | 1.30 | 1.00 | | | 1.25 | | | | 16.0 |
| 18.0 | 0.95 | 0.85 | 0.75 | 0.50 | 1.30 | 0.95 | | | 1.25 | 0.95 | | | 1.25 | 0.95 | | | 1.20 | 0.95 | | | 18.0 |
| 20.0 | 0.85 | 0.80 | 0.75 | 0.50 | 1.20 | 0.90 | 0.75 | | 1.20 | 0.90 | 0.75 | | 1.20 | 0.90 | | | 1.15 | 0.90 | | | 20.0 |
| 22.0 | 0.80 | 0.75 | 0.70 | | 1.15 | 0.90 | 0.75 | 0.50 | 1.15 | 0.90 | 0.75 | 0.50 | 1.15 | 0.90 | 0.75 | | 1.15 | 0.90 | 0.75 | | 22.0 |
| 24.0 | 0.75 | 0.75 | | | 1.10 | 0.85 | 0.70 | 0.45 | 1.10 | 0.85 | 0.70 | 0.45 | 1.10 | 0.85 | 0.70 | 0.45 | 1.10 | 0.85 | 0.70 | 0.45 | 24.0 |
| 26.0 | | | | | 1.05 | 0.85 | 0.70 | 0.45 | 1.05 | 0.85 | 0.70 | 0.45 | 1.05 | 0.85 | 0.70 | 0.45 | 1.05 | 0.85 | 0.70 | 0.45 | 26.0 |
| 28.0 | | | | | 1.00 | 0.80 | 0.70 | 0.45 | 1.00 | 0.80 | 0.70 | 0.45 | 1.05 | 0.80 | 0.70 | 0.45 | 1.00 | 0.80 | 0.70 | 0.45 | 28.0 |
| 30.0 | | | | | 0.95 | 0.80 | 0.70 | 0.45 | 0.95 | 0.80 | 0.70 | 0.45 | 1.00 | 0.80 | 0.70 | 0.45 | 1.00 | 0.80 | 0.70 | 0.45 | 30.0 |
| 32.0 | | | | | 0.90 | 0.75 | 0.70 | | 0.95 | 0.75 | 0.70 | 0.40 | 0.95 | 0.75 | 0.70 | 0.40 | 0.95 | 0.75 | 0.70 | 0.40 | 32.0 |
| 34.0 | | | | | 0.85 | 0.75 | 0.70 | | 0.90 | 0.75 | 0.70 | | 0.90 | 0.75 | 0.70 | 0.40 | 0.90 | 0.75 | 0.70 | 0.40 | 34.0 |
| 36.0 | | | | | 0.85 | 0.75 | 0.70 | | 0.85 | 0.75 | 0.70 | | 0.90 | 0.75 | 0.70 | | 0.90 | 0.75 | 0.65 | 0.40 | 36.0 |
| 38.0 | | | | | 0.80 | 0.70 | 0.70 | | 0.85 | 0.70 | 0.70 | | 0.85 | 0.70 | 0.65 | | 0.85 | 0.70 | 0.65 | | 38.0 |
| 40.0 | | | | | 0.80 | 0.70 | 0.70 | | 0.80 | 0.70 | 0.70 | | 0.75 | 0.70 | 0.65 | | 0.70 | 0.70 | 0.65 | | 40.0 |
| 42.0 | | | | | 0.75 | 0.70 | | | 0.75 | 0.70 | 0.70 | | 0.55 | 0.70 | 0.65 | | 0.50 | 0.70 | 0.65 | | 42.0 |
| 44.0 | | | | | 0.75 | 0.70 | | | 0.55 | 0.70 | | | | 0.60 | 0.65 | | | 0.55 | 0.65 | | 44.0 |
| 46.0 | | | | | 0.55 | 0.70 | | | 0.40 | 0.55 | | | | 0.40 | | | | | 0.50 | | 46.0 |
| 48.0 | | | | | 0.40 | 0.50 | | | | | | | | | | | | | | | 48.0 |
| 50.0 | | | | | | | | | | | | | | | | | | | | | 50.0 |
| 52.0 | | | | | | | | | | | | | | | | | | | | | 52.0 |
| 54.0 | | | | | | | | | | | | | | | | | | | | | 54.0 |
| 55.0 | | | | | | | | | | | | | | | | | | | | | 55.0 |
| 56.0 | | | | | | | | | | | | | | | | | | | | | 56.0 |
| 1 | 0 | 0 | 0 | 0 | 0 | 0 | 0 | 0 | 46 | 46 | 46 | 46 | 92 | 92 | 92 | 92 | 100 | 100 | 100 | 100 | 1 |
| 2 | 0 | 0 | 0 | 0 | 92 | 92 | 92 | 92 | 92 | 92 | 92 | 92 | 92 | 92 | 92 | 92 | 100 | 100 | 100 | 100 | 2 |
| 3 | 0 | 0 | 0 | 0 | 92 | 92 | 92 | 92 | 92 | 92 | 92 | 92 | 92 | 92 | 92 | 92 | 100 | 100 | 100 | 100 | 3 |
| 4 | 0 | 0 | 0 | 0 | 92 | 92 | 92 | 92 | 92 | 92 | 92 | 92 | 92 | 92 | 92 | 92 | 100 | 100 | 100 | 100 | 4 |
| 5 | 0 | 0 | 0 | 0 | 92 | 92 | 92 | 92 | 92 | 92 | 92 | 92 | 92 | 92 | 92 | 92 | 100 | 100 | 100 | 100 | 5 |
| ID | 1 | 1 | 1 | 1 | 9 | 9 | 9 | 9 | 10 | 10 | 10 | 10 | 11 | 11 | 11 | 11 | 22 | 22 | 22 | 22 | ID |
| [DEG] | 19～84 | 31～84 | 51～84 | 65～84 | 31～84 | 37～84 | 54～84 | 71～84 | 41～84 | 47～84 | 55～84 | 70～84 | 51～84 | 52～84 | 57～84 | 69～84 | 53～84 | 56～84 | 57～84 | 68～84 | [DEG] |
| | 1 | 1 | 1 | 1 | 1 | 1 | 1 | 1 | 1 | 1 | 1 | 1 | 1 | 1 | 1 | 1 | 1 | 1 | 1 | 1 | |
| | 5t | 5t | 5t | 5t | 5t | 5t | 5t | 5t | 5t | 5t | 5t | 5t | 5t | 5t | 5t | 5t | 5t | 5t | 5t | 5t | |

| FAJ | 8.4m | 4.0 t | 6.4m | 360 ° | JPN |
|---|---|---|---|---|---|

| m | 10.2 | 10.2 | 10.2 | 10.2 | 38.2 | 38.2 | 38.2 | 38.2 | 41.7 | 41.7 | 41.7 | 41.7 | 45.2 | 45.2 | 45.2 | 45.2 | 48.0 | 48.0 | 48.0 | 48.0 | m |
|---|---|---|---|---|---|---|---|---|---|---|---|---|---|---|---|---|---|---|---|---|---|
| ° | 5 | 25 | 45 | 60 | 5 | 25 | 45 | 60 | 5 | 25 | 45 | 60 | 5 | 25 | 45 | 60 | 5 | 25 | 45 | 60 | ° |
| 2.0 | 4.00 | | | | | | | | | | | | | | | | | | | | 2.0 |
| 3.0 | 4.00 | | | | | | | | | | | | | | | | | | | | 3.0 |
| 4.0 | 4.00 | 4.00 | | | | | | | | | | | | | | | | | | | 4.0 |
| 5.0 | 4.00 | 4.00 | | | | | | | | | | | | | | | | | | | 5.0 |
| 6.0 | 4.00 | 4.00 | 3.00 | | | | | | | | | | | | | | | | | | 6.0 |
| 7.0 | 4.00 | 4.00 | 2.85 | | 4.00 | | | | 4.00 | | | | | | | | | | | | 7.0 |
| 8.0 | 4.00 | 4.00 | 2.70 | 1.60 | 4.00 | | | | 4.00 | | | | 4.00 | | | | 4.00 | | | | 8.0 |
| 9.0 | 4.00 | 4.00 | 2.55 | 1.55 | 4.00 | | | | 4.00 | | | | 4.00 | | | | 4.00 | | | | 9.0 |
| 10.0 | 4.00 | 3.90 | 2.45 | 1.50 | 4.00 | 4.00 | | | 4.00 | 4.00 | | | 4.00 | | | | 4.00 | | | | 10.0 |
| 11.0 | 4.00 | 3.70 | 2.35 | | 4.00 | 4.00 | | | 4.00 | 4.00 | | | 4.00 | 4.00 | | | 4.00 | | | | 11.0 |
| 12.0 | 4.00 | 3.50 | 2.30 | | 4.00 | 4.00 | 2.65 | 1.55 | 4.00 | 4.00 | 2.65 | | 4.00 | 3.95 | | | 4.00 | 3.70 | | | 12.0 |
| 13.0 | 4.00 | 3.35 | | | 4.00 | 4.00 | 2.60 | 1.50 | 4.00 | 3.90 | 2.60 | 1.50 | 4.00 | 3.80 | 2.60 | | 3.95 | 3.55 | | | 13.0 |
| 14.0 | 4.00 | 3.20 | | | 4.00 | 3.85 | 2.55 | 1.50 | 4.00 | 3.75 | 2.55 | 1.50 | 4.00 | 3.65 | 2.55 | 1.50 | 3.85 | 3.45 | 2.60 | 1.50 | 14.0 |
| 16.0 | | | | | 4.00 | 3.60 | 2.45 | 1.45 | 3.95 | 3.50 | 2.45 | 1.45 | 3.85 | 3.40 | 2.45 | 1.45 | 3.55 | 3.20 | 2.50 | 1.45 | 16.0 |
| 18.0 | | | | | 3.75 | 3.35 | 2.35 | 1.40 | 3.65 | 3.25 | 2.35 | 1.40 | 3.55 | 3.20 | 2.40 | 1.40 | 3.30 | 3.05 | 2.40 | 1.40 | 18.0 |
| 20.0 | | | | | 3.50 | 3.15 | 2.25 | 1.40 | 3.40 | 3.05 | 2.30 | 1.40 | 3.30 | 3.00 | 2.30 | 1.40 | 3.05 | 2.85 | 2.30 | 1.40 | 20.0 |
| 22.0 | | | | | 3.25 | 2.95 | 2.20 | 1.35 | 3.20 | 2.90 | 2.20 | 1.35 | 3.10 | 2.80 | 2.25 | 1.35 | 2.70 | 2.60 | 2.25 | 1.35 | 22.0 |
| 24.0 | | | | | 2.95 | 2.80 | 2.15 | | 2.80 | 2.75 | 2.15 | 1.35 | 2.55 | 2.65 | 2.15 | 1.35 | 2.35 | 2.25 | 2.20 | 1.35 | 24.0 |
| 26.0 | | | | | 2.40 | 2.65 | 2.10 | | 2.25 | 2.50 | 2.10 | | 2.00 | 2.30 | 2.10 | | 1.90 | 1.95 | 1.95 | 1.30 | 26.0 |
| 28.0 | | | | | 1.95 | 2.15 | 2.05 | | 1.80 | 2.00 | 2.05 | | 1.50 | 1.80 | 2.00 | | 1.45 | 1.70 | 1.75 | | 28.0 |
| 30.0 | | | | | 1.50 | 1.70 | 1.80 | | 1.35 | 1.55 | 1.70 | | 1.10 | 1.35 | 1.50 | | 1.05 | 1.30 | 1.50 | | 30.0 |
| 32.0 | | | | | 1.15 | 1.30 | | | 1.00 | 1.20 | 1.30 | | 0.75 | 1.00 | 1.10 | | 0.70 | 0.95 | 1.10 | | 32.0 |
| 34.0 | | | | | 0.85 | 0.95 | | | 0.70 | 0.85 | | | | 0.65 | 0.75 | | | 0.60 | 0.70 | | 34.0 |
| 36.0 | | | | | 0.55 | 0.65 | | | 0.40 | 0.55 | | | | | | | | | | | 36.0 |
| 38.0 | | | | | | 0.40 | | | | | | | | | | | | | | | 38.0 |
| 40.0 | | | | | | | | | | | | | | | | | | | | | 40.0 |
| 42.0 | | | | | | | | | | | | | | | | | | | | | 42.0 |
| 44.0 | | | | | | | | | | | | | | | | | | | | | 44.0 |
| 46.0 | | | | | | | | | | | | | | | | | | | | | 46.0 |
| 48.0 | | | | | | | | | | | | | | | | | | | | | 48.0 |
| 50.0 | | | | | | | | | | | | | | | | | | | | | 50.0 |
| 52.0 | | | | | | | | | | | | | | | | | | | | | 52.0 |
| 54.0 | | | | | | | | | | | | | | | | | | | | | 54.0 |
| 55.0 | | | | | | | | | | | | | | | | | | | | | 55.0 |
| 56.0 | | | | | | | | | | | | | | | | | | | | | 56.0 |
| 1 | 0 | 0 | 0 | 0 | 0 | 0 | 0 | 0 | 46 | 46 | 46 | 46 | 92 | 92 | 92 | 92 | 100 | 100 | 100 | 100 | 1 |
| 2 | 0 | 0 | 0 | 0 | 92 | 92 | 92 | 92 | 92 | 92 | 92 | 92 | 92 | 92 | 92 | 92 | 100 | 100 | 100 | 100 | 2 |
| 3 | 0 | 0 | 0 | 0 | 92 | 92 | 92 | 92 | 92 | 92 | 92 | 92 | 92 | 92 | 92 | 92 | 100 | 100 | 100 | 100 | 3 |
| 4 | 0 | 0 | 0 | 0 | 92 | 92 | 92 | 92 | 92 | 92 | 92 | 92 | 92 | 92 | 92 | 92 | 100 | 100 | 100 | 100 | 4 |
| 5 | 0 | 0 | 0 | 0 | 92 | 92 | 92 | 92 | 92 | 92 | 92 | 92 | 92 | 92 | 92 | 92 | 100 | 100 | 100 | 100 | 5 |
| ID | 1 | 1 | 1 | 1 | 9 | 9 | 9 | 9 | 10 | 10 | 10 | 10 | 11 | 11 | 11 | 11 | 22 | 22 | 22 | 22 | ID |
| [DEG] | 28～84 | 35～84 | 54～84 | 68～84 | 37～84 | 35～84 | 54～84 | 68～84 | 42～84 | 46～84 | 54～84 | 67～84 | 53～84 | 54～84 | 55～84 | 69～84 | 56～84 | 56～84 | 58～84 | 68～84 | [DEG] |
| | 1 | 1 | 1 | 1 | 1 | 1 | 1 | 1 | 1 | 1 | 1 | 1 | 1 | 1 | 1 | 1 | 1 | 1 | 1 | 1 | |
| | 5t | 5t | 5t | 5t | 5t | 5t | 5t | 5t | 5t | 5t | 5t | 5t | 5t | 5t | 5t | 5t | 5t | 5t | 5t | 5t | |

# フルオートジブ

| FAJ | 13.1m | 4.0 t | 6.4m | 360 ° | JPN |
|---|---|---|---|---|---|

| m | 10.2 | 10.2 | 10.2 | 10.2 | 38.2 | 38.2 | 38.2 | 38.2 | 41.7 | 41.7 | 41.7 | 41.7 | 45.2 | 45.2 | 45.2 | 45.2 | 48.0 | 48.0 | 48.0 | 48.0 | m |
|---|---|---|---|---|---|---|---|---|---|---|---|---|---|---|---|---|---|---|---|---|---|
| ° | 5 | 25 | 45 | 60 | 5 | 25 | 45 | 60 | 5 | 25 | 45 | 60 | 5 | 25 | 45 | 60 | 5 | 25 | 45 | 60 | ° |
| 2.0 | 2.80 | | | | | | | | | | | | | | | | | | | | 2.0 |
| 3.0 | 2.80 | | | | | | | | | | | | | | | | | | | | 3.0 |
| 4.0 | 2.80 | | | | | | | | | | | | | | | | | | | | 4.0 |
| 5.0 | 2.80 | | | | | | | | | | | | | | | | | | | | 5.0 |
| 6.0 | 2.80 | | | | | | | | | | | | | | | | | | | | 6.0 |
| 7.0 | 2.80 | 2.60 | | | | | | | | | | | | | | | | | | | 7.0 |
| 8.0 | 2.80 | 2.45 | | | 2.80 | | | | 2.80 | | | | | | | | | | | | 8.0 |
| 9.0 | 2.80 | 2.30 | | | 2.80 | | | | 2.80 | | | | 2.80 | | | | | | | | 9.0 |
| 10.0 | 2.65 | 2.20 | 1.75 | | 2.80 | | | | 2.80 | | | | 2.80 | | | | 2.65 | | | | 10.0 |
| 11.0 | 2.50 | 2.10 | 1.65 | | 2.80 | | | | 2.80 | | | | 2.80 | | | | 2.65 | | | | 11.0 |
| 12.0 | 2.35 | 2.00 | 1.55 | 0.90 | 2.80 | | | | 2.80 | | | | 2.75 | | | | 2.60 | | | | 12.0 |
| 13.0 | 2.25 | 1.95 | 1.50 | 0.85 | 2.80 | 2.20 | | | 2.80 | 2.20 | | | 2.70 | | | | 2.55 | | | | 13.0 |
| 14.0 | 2.10 | 1.85 | 1.45 | 0.85 | 2.80 | 2.15 | | | 2.75 | 2.15 | | | 2.65 | 2.15 | | | 2.55 | | | | 14.0 |
| 16.0 | 1.95 | 1.75 | 1.35 | | 2.70 | 2.05 | 1.55 | | 2.65 | 2.05 | 1.55 | | 2.60 | 2.05 | | | 2.45 | 2.05 | | | 16.0 |
| 18.0 | 1.80 | 1.65 | | | 2.55 | 2.00 | 1.50 | 0.80 | 2.55 | 2.00 | 1.50 | 0.80 | 2.50 | 2.00 | 1.50 | 0.80 | 2.40 | 1.95 | 1.50 | | 18.0 |
| 20.0 | 1.70 | | | | 2.45 | 1.90 | 1.40 | 0.80 | 2.45 | 1.90 | 1.45 | 0.80 | 2.45 | 1.90 | 1.45 | 0.80 | 2.35 | 1.90 | 1.45 | 0.80 | 20.0 |
| 22.0 | | | | | 2.30 | 1.85 | 1.35 | 0.75 | 2.35 | 1.85 | 1.35 | 0.75 | 2.35 | 1.85 | 1.40 | 0.75 | 2.30 | 1.85 | 1.40 | 0.75 | 22.0 |
| 24.0 | | | | | 2.20 | 1.80 | 1.30 | 0.75 | 2.25 | 1.80 | 1.35 | 0.75 | 2.25 | 1.80 | 1.35 | 0.75 | 2.25 | 1.80 | 1.35 | 0.75 | 24.0 |
| 26.0 | | | | | 2.10 | 1.75 | 1.25 | 0.75 | 2.15 | 1.75 | 1.30 | 0.75 | 2.15 | 1.75 | 1.30 | 0.75 | 2.00 | 1.75 | 1.30 | 0.75 | 26.0 |
| 28.0 | | | | | 2.00 | 1.70 | 1.25 | | 2.05 | 1.70 | 1.25 | 0.75 | 1.90 | 1.75 | 1.25 | 0.70 | 1.75 | 1.75 | 1.25 | 0.70 | 28.0 |
| 30.0 | | | | | 1.90 | 1.70 | 1.20 | | 1.75 | 1.70 | 1.20 | | 1.50 | 1.70 | 1.20 | 0.70 | 1.40 | 1.55 | 1.20 | 0.70 | 30.0 |
| 32.0 | | | | | 1.55 | 1.65 | 1.20 | | 1.35 | 1.65 | 1.20 | | 1.15 | 1.50 | 1.20 | | 1.05 | 1.35 | 1.20 | | 32.0 |
| 34.0 | | | | | 1.20 | 1.45 | 1.15 | | 1.05 | 1.30 | 1.15 | | 0.80 | 1.10 | 1.15 | | 0.75 | 1.10 | 1.15 | | 34.0 |
| 36.0 | | | | | 0.90 | 1.15 | | | 0.75 | 1.00 | 1.15 | | 0.55 | 0.80 | 1.00 | | | 0.75 | 0.95 | | 36.0 |
| 38.0 | | | | | 0.65 | 0.85 | | | 0.50 | 0.75 | | | | 0.55 | 0.70 | | | | 0.65 | | 38.0 |
| 40.0 | | | | | | 0.60 | | | | 0.50 | | | | | | | | | | | 40.0 |
| 42.0 | | | | | | | | | | | | | | | | | | | | | 42.0 |
| 44.0 | | | | | | | | | | | | | | | | | | | | | 44.0 |
| 46.0 | | | | | | | | | | | | | | | | | | | | | 46.0 |
| 48.0 | | | | | | | | | | | | | | | | | | | | | 48.0 |
| 50.0 | | | | | | | | | | | | | | | | | | | | | 50.0 |
| 52.0 | | | | | | | | | | | | | | | | | | | | | 52.0 |
| 54.0 | | | | | | | | | | | | | | | | | | | | | 54.0 |
| 55.0 | | | | | | | | | | | | | | | | | | | | | 55.0 |
| 56.0 | | | | | | | | | | | | | | | | | | | | | 56.0 |
| 1 | 0 | 0 | 0 | 0 | 0 | 0 | 0 | 0 | 46 | 46 | 46 | 46 | 92 | 92 | 92 | 92 | 100 | 100 | 100 | 100 | 1 |
| 2 | 0 | 0 | 0 | 0 | 92 | 92 | 92 | 92 | 92 | 92 | 92 | 92 | 92 | 92 | 92 | 92 | 100 | 100 | 100 | 100 | 2 |
| 3 | 0 | 0 | 0 | 0 | 92 | 92 | 92 | 92 | 92 | 92 | 92 | 92 | 92 | 92 | 92 | 92 | 100 | 100 | 100 | 100 | 3 |
| 4 | 0 | 0 | 0 | 0 | 92 | 92 | 92 | 92 | 92 | 92 | 92 | 92 | 92 | 92 | 92 | 92 | 100 | 100 | 100 | 100 | 4 |
| 5 | 0 | 0 | 0 | 0 | 92 | 92 | 92 | 92 | 92 | 92 | 92 | 92 | 92 | 92 | 92 | 92 | 100 | 100 | 100 | 100 | 5 |
| ID | 1 | 1 | 1 | 1 | 9 | 9 | 9 | 9 | 10 | 10 | 10 | 10 | 11 | 11 | 11 | 11 | 22 | 22 | 22 | 22 | ID |
| [DEG] | 0～84 | 40～84 | 57～84 | 71～84 | 41～84 | 43～84 | 56～84 | 69～84 | 46～84 | 48～84 | 57～84 | 68～84 | 53～84 | 55～84 | 57～84 | 68～84 | 58～84 | 59～84 | 60～84 | 70～84 | [DEG] |
| | 1 | 1 | 1 | 1 | 1 | 1 | 1 | 1 | 1 | 1 | 1 | 1 | 1 | 1 | 1 | 1 | 1 | 1 | 1 | 1 | |
| | 5t | 5t | 5t | 5t | 5t | 5t | 5t | 5t | 5t | 5t | 5t | 5t | 5t | 5t | 5t | 5t | 5t | 5t | 5t | 5t | |

| FAJ | 17.7m | 4.0 t | 6.4m | 360 ° | JPN |
|---|---|---|---|---|---|

| m | 10.2 | 10.2 | 10.2 | 10.2 | 38.2 | 38.2 | 38.2 | 38.2 | 41.7 | 41.7 | 41.7 | 41.7 | 45.2 | 45.2 | 45.2 | 45.2 | 48.0 | 48.0 | 48.0 | 48.0 | m |
|---|---|---|---|---|---|---|---|---|---|---|---|---|---|---|---|---|---|---|---|---|---|
| ° | 5 | 25 | 45 | 60 | 5 | 25 | 45 | 60 | 5 | 25 | 45 | 60 | 5 | 25 | 45 | 60 | 5 | 25 | 45 | 60 | ° |
| 2.0 | | | | | | | | | | | | | | | | | | | | | 2.0 |
| 3.0 | 1.50 | | | | | | | | | | | | | | | | | | | | 3.0 |
| 4.0 | 1.50 | | | | | | | | | | | | | | | | | | | | 4.0 |
| 5.0 | 1.50 | | | | | | | | | | | | | | | | | | | | 5.0 |
| 6.0 | 1.50 | | | | | | | | | | | | | | | | | | | | 6.0 |
| 7.0 | 1.50 | | | | | | | | | | | | | | | | | | | | 7.0 |
| 8.0 | 1.50 | | | | 1.50 | | | | | | | | | | | | | | | | 8.0 |
| 9.0 | 1.50 | 1.25 | | | 1.50 | | | | 1.50 | | | | 1.45 | | | | | | | | 9.0 |
| 10.0 | 1.45 | 1.15 | | | 1.50 | | | | 1.50 | | | | 1.45 | | | | 1.35 | | | | 10.0 |
| 11.0 | 1.35 | 1.10 | | | 1.50 | | | | 1.45 | | | | 1.40 | | | | 1.35 | | | | 11.0 |
| 12.0 | 1.25 | 1.05 | | | 1.45 | | | | 1.45 | | | | 1.40 | | | | 1.35 | | | | 12.0 |
| 13.0 | 1.20 | 1.00 | | | 1.45 | | | | 1.40 | | | | 1.35 | | | | 1.30 | | | | 13.0 |
| 14.0 | 1.15 | 0.95 | 0.85 | | 1.40 | | | | 1.40 | | | | 1.35 | | | | 1.30 | | | | 14.0 |
| 16.0 | 1.00 | 0.90 | 0.80 | 0.55 | 1.35 | 1.00 | | | 1.30 | 1.00 | | | 1.30 | 1.00 | | | 1.25 | | | | 16.0 |
| 18.0 | 0.95 | 0.85 | 0.75 | 0.50 | 1.30 | 0.95 | | | 1.25 | 0.95 | | | 1.25 | 0.95 | | | 1.20 | 0.95 | | | 18.0 |
| 20.0 | 0.85 | 0.80 | 0.75 | 0.50 | 1.20 | 0.90 | 0.75 | | 1.20 | 0.90 | 0.75 | | 1.20 | 0.90 | | | 1.15 | 0.90 | | | 20.0 |
| 22.0 | 0.80 | 0.75 | 0.70 | | 1.15 | 0.90 | 0.75 | 0.50 | 1.15 | 0.90 | 0.75 | 0.50 | 1.15 | 0.90 | 0.75 | | 1.15 | 0.90 | 0.75 | | 22.0 |
| 24.0 | 0.75 | 0.75 | | | 1.10 | 0.85 | 0.70 | 0.45 | 1.10 | 0.85 | 0.70 | 0.45 | 1.10 | 0.85 | 0.70 | 0.45 | 1.10 | 0.85 | 0.70 | 0.45 | 24.0 |
| 26.0 | | | | | 1.05 | 0.85 | 0.70 | 0.45 | 1.05 | 0.85 | 0.70 | 0.45 | 1.05 | 0.85 | 0.70 | 0.45 | 1.05 | 0.85 | 0.70 | 0.45 | 26.0 |
| 28.0 | | | | | 1.00 | 0.80 | 0.70 | 0.45 | 1.00 | 0.80 | 0.70 | 0.45 | 1.05 | 0.80 | 0.70 | 0.45 | 1.00 | 0.80 | 0.70 | 0.45 | 28.0 |
| 30.0 | | | | | 0.95 | 0.80 | 0.70 | 0.45 | 0.95 | 0.80 | 0.70 | 0.45 | 1.00 | 0.80 | 0.70 | 0.45 | 1.00 | 0.80 | 0.70 | 0.45 | 30.0 |
| 32.0 | | | | | 0.90 | 0.75 | 0.70 | | 0.95 | 0.75 | 0.70 | 0.40 | 0.95 | 0.75 | 0.70 | 0.40 | 0.95 | 0.75 | 0.70 | 0.40 | 32.0 |
| 34.0 | | | | | 0.85 | 0.75 | 0.70 | | 0.90 | 0.75 | 0.70 | | 0.90 | 0.75 | 0.70 | 0.40 | 0.90 | 0.75 | 0.70 | 0.40 | 34.0 |
| 36.0 | | | | | 0.85 | 0.75 | 0.70 | | 0.85 | 0.75 | 0.70 | | 0.85 | 0.75 | 0.70 | | 0.75 | 0.75 | 0.65 | 0.40 | 36.0 |
| 38.0 | | | | | 0.80 | 0.70 | 0.70 | | 0.80 | 0.70 | 0.70 | | 0.60 | 0.70 | 0.65 | | | 0.70 | 0.65 | | 38.0 |
| 40.0 | | | | | 0.75 | 0.70 | 0.70 | | 0.60 | 0.70 | 0.70 | | | 0.70 | 0.65 | | | 0.65 | 0.65 | | 40.0 |
| 42.0 | | | | | 0.55 | 0.70 | | | 0.40 | 0.65 | 0.70 | | | 0.45 | 0.60 | | | | 0.60 | | 42.0 |
| 44.0 | | | | | | 0.55 | | | | 0.40 | | | | | | | | | | | 44.0 |
| 46.0 | | | | | | | | | | | | | | | | | | | | | 46.0 |
| 48.0 | | | | | | | | | | | | | | | | | | | | | 48.0 |
| 50.0 | | | | | | | | | | | | | | | | | | | | | 50.0 |
| 52.0 | | | | | | | | | | | | | | | | | | | | | 52.0 |
| 54.0 | | | | | | | | | | | | | | | | | | | | | 54.0 |
| 55.0 | | | | | | | | | | | | | | | | | | | | | 55.0 |
| 56.0 | | | | | | | | | | | | | | | | | | | | | 56.0 |
| 1 | 0 | 0 | 0 | 0 | 0 | 0 | 0 | 0 | 46 | 46 | 46 | 46 | 92 | 92 | 92 | 92 | 100 | 100 | 100 | 100 | 1 |
| 2 | 0 | 0 | 0 | 0 | 92 | 92 | 92 | 92 | 92 | 92 | 92 | 92 | 92 | 92 | 92 | 92 | 100 | 100 | 100 | 100 | 2 |
| 3 | 0 | 0 | 0 | 0 | 92 | 92 | 92 | 92 | 92 | 92 | 92 | 92 | 92 | 92 | 92 | 92 | 100 | 100 | 100 | 100 | 3 |
| 4 | 0 | 0 | 0 | 0 | 92 | 92 | 92 | 92 | 92 | 92 | 92 | 92 | 92 | 92 | 92 | 92 | 100 | 100 | 100 | 100 | 4 |
| 5 | 0 | 0 | 0 | 0 | 92 | 92 | 92 | 92 | 92 | 92 | 92 | 92 | 92 | 92 | 92 | 92 | 100 | 100 | 100 | 100 | 5 |
| ID | 1 | 1 | 1 | 1 | 9 | 9 | 9 | 9 | 10 | 10 | 10 | 10 | 11 | 11 | 11 | 11 | 22 | 22 | 22 | 22 | ID |
| [DEG] | 19～84 | 31～84 | 51～84 | 65～84 | 42～84 | 45～84 | 54～84 | 71～84 | 47～84 | 50～84 | 55～84 | 70～84 | 56～84 | 57～84 | 59～84 | 69～84 | 59～84 | 61～84 | 62～84 | 68～84 | [DEG] |
| | 1 | 1 | 1 | 1 | 1 | 1 | 1 | 1 | 1 | 1 | 1 | 1 | 1 | 1 | 1 | 1 | 1 | 1 | 1 | 1 | |
| | 5t | 5t | 5t | 5t | 5t | 5t | 5t | 5t | 5t | 5t | 5t | 5t | 5t | 5t | 5t | 5t | 5t | 5t | 5t | 5t | |

| FAJ | 8.4m | 4.0 t | 5.38m | 360 ° | JPN |
|---|---|---|---|---|---|

| m | 10.2 | 10.2 | 10.2 | 10.2 | 38.2 | 38.2 | 38.2 | 38.2 | 41.7 | 41.7 | 41.7 | 41.7 | 45.2 | 45.2 | 45.2 | 45.2 | 48.0 | 48.0 | 48.0 | 48.0 | m |
|---|---|---|---|---|---|---|---|---|---|---|---|---|---|---|---|---|---|---|---|---|---|
| ° | 5 | 25 | 45 | 60 | 5 | 25 | 45 | 60 | 5 | 25 | 45 | 60 | 5 | 25 | 45 | 60 | 5 | 25 | 45 | 60 | ° |
| 2.0 | 4.00 | | | | | | | | | | | | | | | | | | | | 2.0 |
| 3.0 | 4.00 | | | | | | | | | | | | | | | | | | | | 3.0 |
| 4.0 | 4.00 | 4.00 | | | | | | | | | | | | | | | | | | | 4.0 |
| 5.0 | 4.00 | 4.00 | | | | | | | | | | | | | | | | | | | 5.0 |
| 6.0 | 4.00 | 4.00 | 3.00 | | | | | | | | | | | | | | | | | | 6.0 |
| 7.0 | 4.00 | 4.00 | 2.85 | | 4.00 | | | | 4.00 | | | | | | | | | | | | 7.0 |
| 8.0 | 4.00 | 4.00 | 2.70 | 1.60 | 4.00 | | | | 4.00 | | | | 4.00 | | | | 4.00 | | | | 8.0 |
| 9.0 | 4.00 | 4.00 | 2.55 | 1.55 | 4.00 | | | | 4.00 | | | | 4.00 | | | | 4.00 | | | | 9.0 |
| 10.0 | 4.00 | 3.90 | 2.45 | 1.50 | 4.00 | 4.00 | | | 4.00 | 4.00 | | | 4.00 | | | | 4.00 | | | | 10.0 |
| 11.0 | 4.00 | 3.70 | 2.35 | | 4.00 | 4.00 | | | 4.00 | 4.00 | | | 4.00 | 4.00 | | | 4.00 | | | | 11.0 |
| 12.0 | 4.00 | 3.50 | 2.30 | | 4.00 | 4.00 | 2.65 | 1.55 | 4.00 | 4.00 | 2.65 | | 4.00 | 3.95 | | | 4.00 | 3.70 | | | 12.0 |
| 13.0 | 4.00 | 3.35 | | | 4.00 | 4.00 | 2.60 | 1.50 | 4.00 | 3.90 | 2.60 | 1.50 | 4.00 | 3.80 | 2.60 | | 3.95 | 3.55 | | | 13.0 |
| 14.0 | 4.00 | 3.20 | | | 4.00 | 3.85 | 2.55 | 1.50 | 4.00 | 3.75 | 2.55 | 1.50 | 4.00 | 3.65 | 2.55 | 1.50 | 3.85 | 3.45 | 2.60 | 1.50 | 14.0 |
| 16.0 | | | | | 4.00 | 3.60 | 2.45 | 1.45 | 3.95 | 3.50 | 2.45 | 1.45 | 3.85 | 3.40 | 2.45 | 1.45 | 3.55 | 3.20 | 2.50 | 1.45 | 16.0 |
| 18.0 | | | | | 3.75 | 3.35 | 2.35 | 1.40 | 3.65 | 3.25 | 2.35 | 1.40 | 3.50 | 3.20 | 2.40 | 1.40 | 3.30 | 3.05 | 2.40 | 1.40 | 18.0 |
| 20.0 | | | | | 3.30 | 3.15 | 2.25 | 1.40 | 3.10 | 3.05 | 2.30 | 1.40 | 2.75 | 3.00 | 2.30 | 1.40 | 2.65 | 2.85 | 2.30 | 1.40 | 20.0 |
| 22.0 | | | | | 2.60 | 2.90 | 2.20 | 1.35 | 2.40 | 2.80 | 2.20 | 1.35 | 2.10 | 2.45 | 2.25 | 1.35 | 2.00 | 2.40 | 2.25 | 1.35 | 22.0 |
| 24.0 | | | | | 2.05 | 2.30 | 2.15 | | 1.85 | 2.20 | 2.15 | 1.35 | 1.55 | 1.90 | 2.15 | 1.35 | 1.45 | 1.80 | 2.10 | 1.35 | 24.0 |
| 26.0 | | | | | 1.60 | 1.80 | 1.95 | | 1.40 | 1.65 | 1.85 | | 1.10 | 1.40 | 1.60 | | 1.00 | 1.35 | 1.55 | 1.30 | 26.0 |
| 28.0 | | | | | 1.15 | 1.40 | 1.50 | | 1.00 | 1.25 | 1.40 | | 0.70 | 0.95 | 1.15 | | | 0.90 | 1.10 | | 28.0 |
| 30.0 | | | | | 0.80 | 1.00 | 1.10 | | 0.65 | 0.85 | 1.00 | | | | 0.75 | | | | | | 30.0 |
| 32.0 | | | | | 0.50 | 0.65 | | | | 0.55 | 0.65 | | | | | | | | | | 32.0 |
| 34.0 | | | | | | | | | | | | | | | | | | | | | 34.0 |
| 36.0 | | | | | | | | | | | | | | | | | | | | | 36.0 |
| 38.0 | | | | | | | | | | | | | | | | | | | | | 38.0 |
| 40.0 | | | | | | | | | | | | | | | | | | | | | 40.0 |
| 42.0 | | | | | | | | | | | | | | | | | | | | | 42.0 |
| 44.0 | | | | | | | | | | | | | | | | | | | | | 44.0 |
| 46.0 | | | | | | | | | | | | | | | | | | | | | 46.0 |
| 48.0 | | | | | | | | | | | | | | | | | | | | | 48.0 |
| 50.0 | | | | | | | | | | | | | | | | | | | | | 50.0 |
| 52.0 | | | | | | | | | | | | | | | | | | | | | 52.0 |
| 54.0 | | | | | | | | | | | | | | | | | | | | | 54.0 |
| 55.0 | | | | | | | | | | | | | | | | | | | | | 55.0 |
| 56.0 | | | | | | | | | | | | | | | | | | | | | 56.0 |
| 1 | 0 | 0 | 0 | 0 | 0 | 0 | 0 | 0 | 46 | 46 | 46 | 46 | 92 | 92 | 92 | 92 | 100 | 100 | 100 | 100 | 1 |
| 2 | 0 | 0 | 0 | 0 | 92 | 92 | 92 | 92 | 92 | 92 | 92 | 92 | 92 | 92 | 92 | 92 | 100 | 100 | 100 | 100 | 2 |
| 3 | 0 | 0 | 0 | 0 | 92 | 92 | 92 | 92 | 92 | 92 | 92 | 92 | 92 | 92 | 92 | 92 | 100 | 100 | 100 | 100 | 3 |
| 4 | 0 | 0 | 0 | 0 | 92 | 92 | 92 | 92 | 92 | 92 | 92 | 92 | 92 | 92 | 92 | 92 | 100 | 100 | 100 | 100 | 4 |
| 5 | 0 | 0 | 0 | 0 | 92 | 92 | 92 | 92 | 92 | 92 | 92 | 92 | 92 | 92 | 92 | 92 | 100 | 100 | 100 | 100 | 5 |
| ID | 1 | 1 | 1 | 1 | 9 | 9 | 9 | 9 | 10 | 10 | 10 | 10 | 11 | 11 | 11 | 11 | 22 | 22 | 22 | 22 | ID |
| [DEG] | 28～84 | 35～84 | 54～84 | 68～84 | 45～84 | 48～84 | 54～84 | 68～84 | 52～84 | 53～84 | 54～84 | 67～84 | 58～84 | 62～84 | 61～84 | 69～84 | 63～84 | 64～84 | 65～84 | 68～84 | [DEG] |
| | 1 | 1 | 1 | 1 | 1 | 1 | 1 | 1 | 1 | 1 | 1 | 1 | 1 | 1 | 1 | 1 | 1 | 1 | 1 | 1 | |
| | 5t | 5t | 5t | 5t | 5t | 5t | 5t | 5t | 5t | 5t | 5t | 5t | 5t | 5t | 5t | 5t | 5t | 5t | 5t | 5t | |

| FAJ | 13.1m | 4.0 t | 5.38m | 360 ° | JPN |
|---|---|---|---|---|---|

| m | 10.2 | 10.2 | 10.2 | 10.2 | 38.2 | 38.2 | 38.2 | 38.2 | 41.7 | 41.7 | 41.7 | 41.7 | 45.2 | 45.2 | 45.2 | 45.2 | 48.0 | 48.0 | 48.0 | 48.0 | m |
|---|---|---|---|---|---|---|---|---|---|---|---|---|---|---|---|---|---|---|---|---|---|
| ° | 5 | 25 | 45 | 60 | 5 | 25 | 45 | 60 | 5 | 25 | 45 | 60 | 5 | 25 | 45 | 60 | 5 | 25 | 45 | 60 | ° |
| 2.0 | 2.80 | | | | | | | | | | | | | | | | | | | | 2.0 |
| 3.0 | 2.80 | | | | | | | | | | | | | | | | | | | | 3.0 |
| 4.0 | 2.80 | | | | | | | | | | | | | | | | | | | | 4.0 |
| 5.0 | 2.80 | | | | | | | | | | | | | | | | | | | | 5.0 |
| 6.0 | 2.80 | | | | | | | | | | | | | | | | | | | | 6.0 |
| 7.0 | 2.80 | 2.60 | | | | | | | | | | | | | | | | | | | 7.0 |
| 8.0 | 2.80 | 2.45 | | | 2.80 | | | | 2.80 | | | | | | | | | | | | 8.0 |
| 9.0 | 2.80 | 2.30 | | | 2.80 | | | | 2.80 | | | | 2.80 | | | | | | | | 9.0 |
| 10.0 | 2.65 | 2.20 | 1.75 | | 2.80 | | | | 2.80 | | | | 2.80 | | | | 2.65 | | | | 10.0 |
| 11.0 | 2.50 | 2.10 | 1.65 | | 2.80 | | | | 2.80 | | | | 2.80 | | | | 2.65 | | | | 11.0 |
| 12.0 | 2.35 | 2.00 | 1.55 | 0.90 | 2.80 | | | | 2.80 | | | | 2.75 | | | | 2.60 | | | | 12.0 |
| 13.0 | 2.25 | 1.95 | 1.50 | 0.85 | 2.80 | 2.20 | | | 2.80 | 2.20 | | | 2.70 | | | | 2.55 | | | | 13.0 |
| 14.0 | 2.10 | 1.85 | 1.45 | 0.85 | 2.80 | 2.15 | | | 2.75 | 2.15 | | | 2.65 | 2.15 | | | 2.55 | | | | 14.0 |
| 16.0 | 1.95 | 1.75 | 1.35 | | 2.70 | 2.05 | 1.55 | | 2.65 | 2.05 | 1.55 | | 2.60 | 2.05 | | | 2.45 | 2.05 | | | 16.0 |
| 18.0 | 1.80 | 1.65 | | | 2.55 | 2.00 | 1.50 | 0.80 | 2.55 | 2.00 | 1.50 | 0.80 | 2.50 | 2.00 | 1.50 | 0.80 | 2.40 | 1.95 | 1.50 | | 18.0 |
| 20.0 | 1.70 | | | | 2.45 | 1.90 | 1.40 | 0.80 | 2.45 | 1.90 | 1.45 | 0.80 | 2.45 | 1.90 | 1.45 | 0.80 | 2.35 | 1.90 | 1.45 | 0.80 | 20.0 |
| 22.0 | | | | | 2.30 | 1.85 | 1.35 | 0.75 | 2.35 | 1.85 | 1.35 | 0.75 | 2.35 | 1.85 | 1.40 | 0.75 | 2.30 | 1.85 | 1.40 | 0.75 | 22.0 |
| 24.0 | | | | | 2.20 | 1.80 | 1.30 | 0.75 | 2.25 | 1.80 | 1.35 | 0.75 | 1.90 | 1.80 | 1.35 | 0.75 | 1.80 | 1.80 | 1.35 | 0.75 | 24.0 |
| 26.0 | | | | | 1.95 | 1.75 | 1.25 | 0.75 | 1.75 | 1.75 | 1.30 | 0.75 | 1.45 | 1.75 | 1.30 | 0.75 | 1.35 | 1.75 | 1.30 | 0.75 | 26.0 |
| 28.0 | | | | | 1.55 | 1.70 | 1.25 | | 1.35 | 1.70 | 1.25 | 0.75 | 1.05 | 1.50 | 1.25 | 0.70 | 0.95 | 1.40 | 1.25 | 0.70 | 28.0 |
| 30.0 | | | | | 1.20 | 1.50 | 1.20 | | 1.00 | 1.35 | 1.20 | | 0.70 | 1.10 | 1.20 | 0.70 | | 1.05 | 1.20 | 0.70 | 30.0 |
| 32.0 | | | | | 0.85 | 1.15 | 1.20 | | 0.70 | 1.00 | 1.20 | | | 0.75 | 1.00 | | | 0.70 | 0.95 | | 32.0 |
| 34.0 | | | | | 0.60 | 0.85 | 1.00 | | | 0.70 | 0.90 | | | | 0.65 | | | | | | 34.0 |
| 36.0 | | | | | | 0.55 | | | | | 0.60 | | | | | | | | | | 36.0 |
| 38.0 | | | | | | | | | | | | | | | | | | | | | 38.0 |
| 40.0 | | | | | | | | | | | | | | | | | | | | | 40.0 |
| 42.0 | | | | | | | | | | | | | | | | | | | | | 42.0 |
| 44.0 | | | | | | | | | | | | | | | | | | | | | 44.0 |
| 46.0 | | | | | | | | | | | | | | | | | | | | | 46.0 |
| 48.0 | | | | | | | | | | | | | | | | | | | | | 48.0 |
| 50.0 | | | | | | | | | | | | | | | | | | | | | 50.0 |
| 52.0 | | | | | | | | | | | | | | | | | | | | | 52.0 |
| 54.0 | | | | | | | | | | | | | | | | | | | | | 54.0 |
| 55.0 | | | | | | | | | | | | | | | | | | | | | 55.0 |
| 56.0 | | | | | | | | | | | | | | | | | | | | | 56.0 |
| 1 | 0 | 0 | 0 | 0 | 0 | 0 | 0 | 0 | 46 | 46 | 46 | 46 | 92 | 92 | 92 | 92 | 100 | 100 | 100 | 100 | 1 |
| 2 | 0 | 0 | 0 | 0 | 92 | 92 | 92 | 92 | 92 | 92 | 92 | 92 | 92 | 92 | 92 | 92 | 100 | 100 | 100 | 100 | 2 |
| 3 | 0 | 0 | 0 | 0 | 92 | 92 | 92 | 92 | 92 | 92 | 92 | 92 | 92 | 92 | 92 | 92 | 100 | 100 | 100 | 100 | 3 |
| 4 | 0 | 0 | 0 | 0 | 92 | 92 | 92 | 92 | 92 | 92 | 92 | 92 | 92 | 92 | 92 | 92 | 100 | 100 | 100 | 100 | 4 |
| 5 | 0 | 0 | 0 | 0 | 92 | 92 | 92 | 92 | 92 | 92 | 92 | 92 | 92 | 92 | 92 | 92 | 100 | 100 | 100 | 100 | 5 |
| ID | 1 | 1 | 1 | 1 | 9 | 9 | 9 | 9 | 10 | 10 | 10 | 10 | 11 | 11 | 11 | 11 | 22 | 22 | 22 | 22 | ID |
| [DEG] | 0～84 | 40～84 | 57～84 | 71～84 | 48～84 | 50～84 | 56～84 | 69～84 | 54～84 | 57～84 | 57～84 | 68～84 | 60～84 | 62～84 | 62～84 | 68～84 | 64～84 | 64～84 | 66～84 | 70～84 | [DEG] |
| | 1 | 1 | 1 | 1 | 1 | 1 | 1 | 1 | 1 | 1 | 1 | 1 | 1 | 1 | 1 | 1 | 1 | 1 | 1 | 1 | |
| | 5t | 5t | 5t | 5t | 5t | 5t | 5t | 5t | 5t | 5t | 5t | 5t | 5t | 5t | 5t | 5t | 5t | 5t | 5t | 5t | |

# フルオートジブ

| FAJ | 17.7m | 4.0 t | 5.38m | 360 ° | JPN |
|---|---|---|---|---|---|

| m | 10.2 | 10.2 | 10.2 | 10.2 | 38.2 | 38.2 | 38.2 | 38.2 | 41.7 | 41.7 | 41.7 | 41.7 | 45.2 | 45.2 | 45.2 | 45.2 | 48.0 | 48.0 | 48.0 | 48.0 | m |
|---|---|---|---|---|---|---|---|---|---|---|---|---|---|---|---|---|---|---|---|---|---|
| ° | 5 | 25 | 45 | 60 | 5 | 25 | 45 | 60 | 5 | 25 | 45 | 60 | 5 | 25 | 45 | 60 | 5 | 25 | 45 | 60 | ° |
| 2.0 | | | | | | | | | | | | | | | | | | | | | 2.0 |
| 3.0 | 1.50 | | | | | | | | | | | | | | | | | | | | 3.0 |
| 4.0 | 1.50 | | | | | | | | | | | | | | | | | | | | 4.0 |
| 5.0 | 1.50 | | | | | | | | | | | | | | | | | | | | 5.0 |
| 6.0 | 1.50 | | | | | | | | | | | | | | | | | | | | 6.0 |
| 7.0 | 1.50 | | | | | | | | | | | | | | | | | | | | 7.0 |
| 8.0 | 1.50 | | | | 1.50 | | | | | | | | | | | | | | | | 8.0 |
| 9.0 | 1.50 | 1.25 | | | 1.50 | | | | 1.50 | | | | 1.45 | | | | | | | | 9.0 |
| 10.0 | 1.45 | 1.15 | | | 1.50 | | | | 1.50 | | | | 1.45 | | | | 1.35 | | | | 10.0 |
| 11.0 | 1.35 | 1.10 | | | 1.50 | | | | 1.45 | | | | 1.40 | | | | 1.35 | | | | 11.0 |
| 12.0 | 1.25 | 1.05 | | | 1.45 | | | | 1.45 | | | | 1.40 | | | | 1.35 | | | | 12.0 |
| 13.0 | 1.20 | 1.00 | | | 1.45 | | | | 1.40 | | | | 1.35 | | | | 1.30 | | | | 13.0 |
| 14.0 | 1.15 | 0.95 | 0.85 | | 1.40 | | | | 1.40 | | | | 1.35 | | | | 1.30 | | | | 14.0 |
| 16.0 | 1.00 | 0.90 | 0.80 | 0.55 | 1.35 | 1.00 | | | 1.30 | 1.00 | | | 1.30 | 1.00 | | | 1.25 | | | | 16.0 |
| 18.0 | 0.95 | 0.85 | 0.75 | 0.50 | 1.30 | 0.95 | | | 1.25 | 0.95 | | | 1.25 | 0.95 | | | 1.20 | 0.95 | | | 18.0 |
| 20.0 | 0.85 | 0.80 | 0.75 | 0.50 | 1.20 | 0.90 | 0.75 | | 1.20 | 0.90 | 0.75 | | 1.20 | 0.90 | | | 1.15 | 0.90 | | | 20.0 |
| 22.0 | 0.80 | 0.75 | 0.70 | | 1.15 | 0.90 | 0.75 | 0.50 | 1.15 | 0.90 | 0.75 | 0.50 | 1.15 | 0.90 | 0.75 | | 1.15 | 0.90 | 0.75 | | 22.0 |
| 24.0 | 0.75 | 0.75 | | | 1.10 | 0.85 | 0.70 | 0.45 | 1.10 | 0.85 | 0.70 | 0.45 | 1.10 | 0.85 | 0.70 | 0.45 | 1.10 | 0.85 | 0.70 | 0.45 | 24.0 |
| 26.0 | | | | | 1.05 | 0.85 | 0.70 | 0.45 | 1.05 | 0.85 | 0.70 | 0.45 | 1.05 | 0.85 | 0.70 | 0.45 | 1.05 | 0.85 | 0.70 | 0.45 | 26.0 |
| 28.0 | | | | | 1.00 | 0.80 | 0.70 | 0.45 | 1.00 | 0.80 | 0.70 | 0.45 | 1.05 | 0.80 | 0.70 | 0.45 | 1.00 | 0.80 | 0.70 | 0.45 | 28.0 |
| 30.0 | | | | | 0.95 | 0.80 | 0.70 | 0.45 | 0.95 | 0.80 | 0.70 | 0.45 | 1.00 | 0.80 | 0.70 | 0.45 | 0.95 | 0.80 | 0.70 | 0.45 | 30.0 |
| 32.0 | | | | | 0.90 | 0.75 | 0.70 | | 0.95 | 0.75 | 0.70 | 0.40 | 0.70 | 0.75 | 0.70 | 0.40 | | 0.75 | 0.70 | 0.40 | 32.0 |
| 34.0 | | | | | 0.85 | 0.75 | 0.70 | | 0.75 | 0.75 | 0.70 | | | 0.75 | 0.70 | 0.40 | | 0.75 | 0.70 | 0.40 | 34.0 |
| 36.0 | | | | | 0.65 | 0.75 | 0.70 | | 0.50 | 0.75 | 0.70 | | | 0.60 | 0.70 | | | | 0.65 | 0.40 | 36.0 |
| 38.0 | | | | | 0.45 | 0.70 | 0.70 | | | 0.60 | 0.70 | | | | 0.60 | | | | | | 38.0 |
| 40.0 | | | | | | 0.50 | 0.60 | | | | 0.55 | | | | | | | | | | 40.0 |
| 42.0 | | | | | | | | | | | | | | | | | | | | | 42.0 |
| 44.0 | | | | | | | | | | | | | | | | | | | | | 44.0 |
| 46.0 | | | | | | | | | | | | | | | | | | | | | 46.0 |
| 48.0 | | | | | | | | | | | | | | | | | | | | | 48.0 |
| 50.0 | | | | | | | | | | | | | | | | | | | | | 50.0 |
| 52.0 | | | | | | | | | | | | | | | | | | | | | 52.0 |
| 54.0 | | | | | | | | | | | | | | | | | | | | | 54.0 |
| 55.0 | | | | | | | | | | | | | | | | | | | | | 55.0 |
| 56.0 | | | | | | | | | | | | | | | | | | | | | 56.0 |
| 1 | 0 | 0 | 0 | 0 | 0 | 0 | 0 | 0 | 46 | 46 | 46 | 46 | 92 | 92 | 92 | 92 | 100 | 100 | 100 | 100 | 1 |
| 2 | 0 | 0 | 0 | 0 | 92 | 92 | 92 | 92 | 92 | 92 | 92 | 92 | 92 | 92 | 92 | 92 | 100 | 100 | 100 | 100 | 2 |
| 3 | 0 | 0 | 0 | 0 | 92 | 92 | 92 | 92 | 92 | 92 | 92 | 92 | 92 | 92 | 92 | 92 | 100 | 100 | 100 | 100 | 3 |
| 4 | 0 | 0 | 0 | 0 | 92 | 92 | 92 | 92 | 92 | 92 | 92 | 92 | 92 | 92 | 92 | 92 | 100 | 100 | 100 | 100 | 4 |
| 5 | 0 | 0 | 0 | 0 | 92 | 92 | 92 | 92 | 92 | 92 | 92 | 92 | 92 | 92 | 92 | 92 | 100 | 100 | 100 | 100 | 5 |
| ID | 1 | 1 | 1 | 1 | 9 | 9 | 9 | 9 | 10 | 10 | 10 | 10 | 11 | 11 | 11 | 11 | 22 | 22 | 22 | 22 | ID |
| [DEG] | 19～84 | 31～84 | 51～84 | 65～84 | 49～84 | 52～84 | 54～84 | 71～84 | 55～84 | 58～84 | 58～84 | 70～84 | 62～84 | 63～84 | 64～84 | 69～84 | 65～84 | 67～84 | 68～84 | 68～84 | [DEG] |
| | 1 | 1 | 1 | 1 | 1 | 1 | 1 | 1 | 1 | 1 | 1 | 1 | 1 | 1 | 1 | 1 | 1 | 1 | 1 | 1 | |
| | 5t | 5t | 5t | 5t | 5t | 5t | 5t | 5t | 5t | 5t | 5t | 5t | 5t | 5t | 5t | 5t | 5t | 5t | 5t | 5t | |

| FAJ | 8.4m | 4.0 t | 4.18m | 360 ° | JPN |
|---|---|---|---|---|---|

| m | 10.2 | 10.2 | 10.2 | 10.2 | 38.2 | 38.2 | 38.2 | 38.2 | 41.7 | 41.7 | 41.7 | 41.7 | 45.2 | 45.2 | 45.2 | 45.2 | 48.0 | 48.0 | 48.0 | 48.0 | m |
|---|---|---|---|---|---|---|---|---|---|---|---|---|---|---|---|---|---|---|---|---|---|
| ° | 5 | 25 | 45 | 60 | 5 | 25 | 45 | 60 | 5 | 25 | 45 | 60 | 5 | 25 | 45 | 60 | 5 | 25 | 45 | 60 | ° |
| 2.0 | 4.00 | | | | | | | | | | | | | | | | | | | | 2.0 |
| 3.0 | 4.00 | | | | | | | | | | | | | | | | | | | | 3.0 |
| 4.0 | 4.00 | 4.00 | | | | | | | | | | | | | | | | | | | 4.0 |
| 5.0 | 4.00 | 4.00 | | | | | | | | | | | | | | | | | | | 5.0 |
| 6.0 | 4.00 | 4.00 | 3.00 | | | | | | | | | | | | | | | | | | 6.0 |
| 7.0 | 4.00 | 4.00 | 2.85 | | 4.00 | | | | 4.00 | | | | | | | | | | | | 7.0 |
| 8.0 | 4.00 | 4.00 | 2.70 | 1.60 | 4.00 | | | | 4.00 | | | | 4.00 | | | | 4.00 | | | | 8.0 |
| 9.0 | 4.00 | 4.00 | 2.55 | 1.55 | 4.00 | | | | 4.00 | | | | 4.00 | | | | 4.00 | | | | 9.0 |
| 10.0 | 4.00 | 3.90 | 2.45 | 1.50 | 4.00 | 4.00 | | | 4.00 | 4.00 | | | 4.00 | | | | 4.00 | | | | 10.0 |
| 11.0 | 4.00 | 3.70 | 2.35 | | 4.00 | 4.00 | | | 4.00 | 4.00 | | | 4.00 | 4.00 | | | 4.00 | | | | 11.0 |
| 12.0 | 4.00 | 3.50 | 2.30 | | 4.00 | 4.00 | 2.65 | 1.55 | 4.00 | 4.00 | 2.65 | | 4.00 | 3.95 | | | 4.00 | 3.70 | | | 12.0 |
| 13.0 | 4.00 | 3.35 | | | 4.00 | 4.00 | 2.60 | 1.50 | 4.00 | 3.90 | 2.60 | 1.50 | 4.00 | 3.80 | 2.60 | | 3.95 | 3.55 | | | 13.0 |
| 14.0 | 4.00 | 3.20 | | | 4.00 | 3.85 | 2.55 | 1.50 | 4.00 | 3.75 | 2.55 | 1.50 | 3.75 | 3.65 | 2.55 | 1.50 | 3.60 | 3.45 | 2.60 | 1.50 | 14.0 |
| 16.0 | | | | | 3.40 | 3.60 | 2.45 | 1.45 | 3.10 | 3.50 | 2.45 | 1.45 | 2.75 | 3.35 | 2.45 | 1.45 | 2.65 | 3.20 | 2.50 | 1.45 | 16.0 |
| 18.0 | | | | | 2.60 | 3.00 | 2.35 | 1.40 | 2.35 | 2.80 | 2.35 | 1.40 | 2.00 | 2.50 | 2.40 | 1.40 | 1.90 | 2.40 | 2.40 | 1.40 | 18.0 |
| 20.0 | | | | | 1.95 | 2.30 | 2.25 | 1.40 | 1.70 | 2.10 | 2.30 | 1.40 | 1.35 | 1.80 | 2.15 | 1.40 | 1.30 | 1.70 | 2.05 | 1.40 | 20.0 |
| 22.0 | | | | | 1.40 | 1.70 | 1.95 | 1.35 | 1.15 | 1.50 | 1.80 | 1.35 | | 1.25 | 1.50 | 1.35 | | 1.15 | 1.45 | 1.35 | 22.0 |
| 24.0 | | | | | 0.95 | 1.25 | 1.45 | | 0.75 | 1.05 | 1.25 | 1.35 | | | 1.00 | 1.10 | | | 0.95 | 1.05 | 24.0 |
| 26.0 | | | | | 0.55 | 0.80 | 1.00 | | | | 0.80 | | | | | | | | | | 26.0 |
| 28.0 | | | | | | | 0.60 | | | | | | | | | | | | | | 28.0 |
| 30.0 | | | | | | | | | | | | | | | | | | | | | 30.0 |
| 32.0 | | | | | | | | | | | | | | | | | | | | | 32.0 |
| 34.0 | | | | | | | | | | | | | | | | | | | | | 34.0 |
| 36.0 | | | | | | | | | | | | | | | | | | | | | 36.0 |
| 38.0 | | | | | | | | | | | | | | | | | | | | | 38.0 |
| 40.0 | | | | | | | | | | | | | | | | | | | | | 40.0 |
| 42.0 | | | | | | | | | | | | | | | | | | | | | 42.0 |
| 44.0 | | | | | | | | | | | | | | | | | | | | | 44.0 |
| 46.0 | | | | | | | | | | | | | | | | | | | | | 46.0 |
| 48.0 | | | | | | | | | | | | | | | | | | | | | 48.0 |
| 50.0 | | | | | | | | | | | | | | | | | | | | | 50.0 |
| 52.0 | | | | | | | | | | | | | | | | | | | | | 52.0 |
| 54.0 | | | | | | | | | | | | | | | | | | | | | 54.0 |
| 55.0 | | | | | | | | | | | | | | | | | | | | | 55.0 |
| 56.0 | | | | | | | | | | | | | | | | | | | | | 56.0 |
| 1 | 0 | 0 | 0 | 0 | 0 | 0 | 0 | 0 | 46 | 46 | 46 | 46 | 92 | 92 | 92 | 92 | 100 | 100 | 100 | 100 | 1 |
| 2 | 0 | 0 | 0 | 0 | 92 | 92 | 92 | 92 | 92 | 92 | 92 | 92 | 92 | 92 | 92 | 92 | 100 | 100 | 100 | 100 | 2 |
| 3 | 0 | 0 | 0 | 0 | 92 | 92 | 92 | 92 | 92 | 92 | 92 | 92 | 92 | 92 | 92 | 92 | 100 | 100 | 100 | 100 | 3 |
| 4 | 0 | 0 | 0 | 0 | 92 | 92 | 92 | 92 | 92 | 92 | 92 | 92 | 92 | 92 | 92 | 92 | 100 | 100 | 100 | 100 | 4 |
| 5 | 0 | 0 | 0 | 0 | 92 | 92 | 92 | 92 | 92 | 92 | 92 | 92 | 92 | 92 | 92 | 92 | 100 | 100 | 100 | 100 | 5 |
| ID | 1 | 1 | 1 | 1 | 9 | 9 | 9 | 9 | 10 | 10 | 10 | 10 | 11 | 11 | 11 | 11 | 22 | 22 | 22 | 22 | ID |
| [DEG] | 28～84 | 35～84 | 54～84 | 68～84 | 55～84 | 58～84 | 57～84 | 68～84 | 61～84 | 64～84 | 63～84 | 67～84 | 68～84 | 69～84 | 68～84 | 69～84 | 69～84 | 70～84 | 70～84 | 71～84 | [DEG] |
| | 1 | 1 | 1 | 1 | 1 | 1 | 1 | 1 | 1 | 1 | 1 | 1 | 1 | 1 | 1 | 1 | 1 | 1 | 1 | 1 | |
| | 5t | 5t | 5t | 5t | 5t | 5t | 5t | 5t | 5t | 5t | 5t | 5t | 5t | 5t | 5t | 5t | 5t | 5t | 5t | 5t | |

| FAJ | 13.1m | 4.0 t | 4.18m | 360 ° | JPN |
|---|---|---|---|---|---|

| m | 10.2 | 10.2 | 10.2 | 10.2 | 38.2 | 38.2 | 38.2 | 38.2 | 41.7 | 41.7 | 41.7 | 41.7 | 45.2 | 45.2 | 45.2 | 45.2 | 48.0 | 48.0 | 48.0 | 48.0 | m |
|---|---|---|---|---|---|---|---|---|---|---|---|---|---|---|---|---|---|---|---|---|---|
| ° | 5 | 25 | 45 | 60 | 5 | 25 | 45 | 60 | 5 | 25 | 45 | 60 | 5 | 25 | 45 | 60 | 5 | 25 | 45 | 60 | ° |
| 2.0 | 2.80 | | | | | | | | | | | | | | | | | | | | 2.0 |
| 3.0 | 2.80 | | | | | | | | | | | | | | | | | | | | 3.0 |
| 4.0 | 2.80 | | | | | | | | | | | | | | | | | | | | 4.0 |
| 5.0 | 2.80 | | | | | | | | | | | | | | | | | | | | 5.0 |
| 6.0 | 2.80 | | | | | | | | | | | | | | | | | | | | 6.0 |
| 7.0 | 2.80 | 2.60 | | | | | | | | | | | | | | | | | | | 7.0 |
| 8.0 | 2.80 | 2.45 | | | 2.80 | | | | 2.80 | | | | | | | | | | | | 8.0 |
| 9.0 | 2.80 | 2.30 | | | 2.80 | | | | 2.80 | | | | 2.80 | | | | | | | | 9.0 |
| 10.0 | 2.65 | 2.20 | 1.75 | | 2.80 | | | | 2.80 | | | | 2.80 | | | | 2.65 | | | | 10.0 |
| 11.0 | 2.50 | 2.10 | 1.65 | | 2.80 | | | | 2.80 | | | | 2.80 | | | | 2.65 | | | | 11.0 |
| 12.0 | 2.35 | 2.00 | 1.55 | 0.90 | 2.80 | | | | 2.80 | | | | 2.75 | | | | 2.60 | | | | 12.0 |
| 13.0 | 2.25 | 1.95 | 1.50 | 0.85 | 2.80 | 2.20 | | | 2.80 | 2.20 | | | 2.70 | | | | 2.55 | | | | 13.0 |
| 14.0 | 2.10 | 1.85 | 1.45 | 0.85 | 2.80 | 2.15 | | | 2.75 | 2.15 | | | 2.65 | 2.15 | | | 2.55 | | | | 14.0 |
| 16.0 | 1.95 | 1.75 | 1.35 | | 2.70 | 2.05 | 1.55 | | 2.65 | 2.05 | 1.55 | | 2.60 | 2.05 | | | 2.45 | 2.05 | | | 16.0 |
| 18.0 | 1.80 | 1.65 | | | 2.55 | 2.00 | 1.50 | 0.80 | 2.55 | 2.00 | 1.50 | 0.80 | 2.35 | 2.00 | 1.50 | 0.80 | 2.25 | 1.95 | 1.50 | | 18.0 |
| 20.0 | 1.70 | | | | 2.30 | 1.90 | 1.40 | 0.80 | 2.05 | 1.90 | 1.45 | 0.80 | 1.75 | 1.90 | 1.45 | 0.80 | 1.65 | 1.90 | 1.45 | 0.80 | 20.0 |
| 22.0 | | | | | 1.75 | 1.85 | 1.35 | 0.75 | 1.55 | 1.85 | 1.35 | 0.75 | 1.20 | 1.80 | 1.40 | 0.75 | 1.15 | 1.75 | 1.40 | 0.75 | 22.0 |
| 24.0 | | | | | 1.30 | 1.75 | 1.30 | 0.75 | 1.10 | 1.60 | 1.35 | 0.75 | | 1.30 | 1.35 | 0.75 | | 1.25 | 1.35 | 0.75 | 24.0 |
| 26.0 | | | | | 0.95 | 1.35 | 1.25 | 0.75 | 0.70 | 1.15 | 1.30 | 0.75 | | 0.90 | 1.25 | 0.75 | | | 1.20 | 0.75 | 26.0 |
| 28.0 | | | | | 0.60 | 0.95 | 1.20 | | | 0.80 | 1.05 | 0.75 | | | 0.85 | 0.70 | | | | 0.70 | 28.0 |
| 30.0 | | | | | | 0.65 | 0.85 | | | | 0.70 | | | | | | | | | | 30.0 |
| 32.0 | | | | | | | 0.55 | | | | | | | | | | | | | | 32.0 |
| 34.0 | | | | | | | | | | | | | | | | | | | | | 34.0 |
| 36.0 | | | | | | | | | | | | | | | | | | | | | 36.0 |
| 38.0 | | | | | | | | | | | | | | | | | | | | | 38.0 |
| 40.0 | | | | | | | | | | | | | | | | | | | | | 40.0 |
| 42.0 | | | | | | | | | | | | | | | | | | | | | 42.0 |
| 44.0 | | | | | | | | | | | | | | | | | | | | | 44.0 |
| 46.0 | | | | | | | | | | | | | | | | | | | | | 46.0 |
| 48.0 | | | | | | | | | | | | | | | | | | | | | 48.0 |
| 50.0 | | | | | | | | | | | | | | | | | | | | | 50.0 |
| 52.0 | | | | | | | | | | | | | | | | | | | | | 52.0 |
| 54.0 | | | | | | | | | | | | | | | | | | | | | 54.0 |
| 55.0 | | | | | | | | | | | | | | | | | | | | | 55.0 |
| 56.0 | | | | | | | | | | | | | | | | | | | | | 56.0 |
| 1 | 0 | 0 | 0 | 0 | 0 | 0 | 0 | 0 | 46 | 46 | 46 | 46 | 92 | 92 | 92 | 92 | 100 | 100 | 100 | 100 | 1 |
| 2 | 0 | 0 | 0 | 0 | 92 | 92 | 92 | 92 | 92 | 92 | 92 | 92 | 92 | 92 | 92 | 92 | 100 | 100 | 100 | 100 | 2 |
| 3 | 0 | 0 | 0 | 0 | 92 | 92 | 92 | 92 | 92 | 92 | 92 | 92 | 92 | 92 | 92 | 92 | 100 | 100 | 100 | 100 | 3 |
| 4 | 0 | 0 | 0 | 0 | 92 | 92 | 92 | 92 | 92 | 92 | 92 | 92 | 92 | 92 | 92 | 92 | 100 | 100 | 100 | 100 | 4 |
| 5 | 0 | 0 | 0 | 0 | 92 | 92 | 92 | 92 | 92 | 92 | 92 | 92 | 92 | 92 | 92 | 92 | 100 | 100 | 100 | 100 | 5 |
| ID | 1 | 1 | 1 | 1 | 9 | 9 | 9 | 9 | 10 | 10 | 10 | 10 | 11 | 11 | 11 | 11 | 22 | 22 | 22 | 22 | ID |
| [DEG] | 0～84 | 40～84 | 57～84 | 71～84 | 57～84 | 59～84 | 59～84 | 69～84 | 62～84 | 64～84 | 65～84 | 68～84 | 69～84 | 69～84 | 69～84 | 70～84 | 70～84 | 72～84 | 73～84 | 72～84 | [DEG] |
| | 1 | 1 | 1 | 1 | 1 | 1 | 1 | 1 | 1 | 1 | 1 | 1 | 1 | 1 | 1 | 1 | 1 | 1 | 1 | 1 | |
| | 5t | 5t | 5t | 5t | 5t | 5t | 5t | 5t | 5t | 5t | 5t | 5t | 5t | 5t | 5t | 5t | 5t | 5t | 5t | 5t | |

| FAJ | 17.7m | 4.0 t | 4.18m | 360 ° | JPN |
|---|---|---|---|---|---|

| m | 10.2 | 10.2 | 10.2 | 10.2 | 38.2 | 38.2 | 38.2 | 38.2 | 41.7 | 41.7 | 41.7 | 41.7 | 45.2 | 45.2 | 45.2 | 45.2 | 48.0 | 48.0 | 48.0 | 48.0 | m |
|---|---|---|---|---|---|---|---|---|---|---|---|---|---|---|---|---|---|---|---|---|---|
| ° | 5 | 25 | 45 | 60 | 5 | 25 | 45 | 60 | 5 | 25 | 45 | 60 | 5 | 25 | 45 | 60 | 5 | 25 | 45 | 60 | ° |
| 2.0 | | | | | | | | | | | | | | | | | | | | | 2.0 |
| 3.0 | 1.50 | | | | | | | | | | | | | | | | | | | | 3.0 |
| 4.0 | 1.50 | | | | | | | | | | | | | | | | | | | | 4.0 |
| 5.0 | 1.50 | | | | | | | | | | | | | | | | | | | | 5.0 |
| 6.0 | 1.50 | | | | | | | | | | | | | | | | | | | | 6.0 |
| 7.0 | 1.50 | | | | | | | | | | | | | | | | | | | | 7.0 |
| 8.0 | 1.50 | | | | 1.50 | | | | | | | | | | | | | | | | 8.0 |
| 9.0 | 1.50 | 1.25 | | | 1.50 | | | | 1.50 | | | | 1.45 | | | | | | | | 9.0 |
| 10.0 | 1.45 | 1.15 | | | 1.50 | | | | 1.50 | | | | 1.45 | | | | 1.35 | | | | 10.0 |
| 11.0 | 1.35 | 1.10 | | | 1.50 | | | | 1.45 | | | | 1.40 | | | | 1.35 | | | | 11.0 |
| 12.0 | 1.25 | 1.05 | | | 1.45 | | | | 1.45 | | | | 1.40 | | | | 1.35 | | | | 12.0 |
| 13.0 | 1.20 | 1.00 | | | 1.45 | | | | 1.40 | | | | 1.35 | | | | 1.30 | | | | 13.0 |
| 14.0 | 1.15 | 0.95 | 0.85 | | 1.40 | | | | 1.40 | | | | 1.35 | | | | 1.30 | | | | 14.0 |
| 16.0 | 1.00 | 0.90 | 0.80 | 0.55 | 1.35 | 1.00 | | | 1.30 | 1.00 | | | 1.30 | 1.00 | | | 1.25 | | | | 16.0 |
| 18.0 | 0.95 | 0.85 | 0.75 | 0.50 | 1.30 | 0.95 | | | 1.25 | 0.95 | | | 1.25 | 0.95 | | | 1.20 | 0.95 | | | 18.0 |
| 20.0 | 0.85 | 0.80 | 0.75 | 0.50 | 1.20 | 0.90 | 0.75 | | 1.20 | 0.90 | 0.75 | | 1.20 | 0.90 | | | 1.15 | 0.90 | | | 20.0 |
| 22.0 | 0.80 | 0.75 | 0.70 | | 1.15 | 0.90 | 0.75 | 0.50 | 1.15 | 0.90 | 0.75 | 0.50 | 1.15 | 0.90 | 0.75 | | 1.15 | 0.90 | 0.75 | | 22.0 |
| 24.0 | 0.75 | 0.75 | | | 1.10 | 0.85 | 0.70 | 0.45 | 1.10 | 0.85 | 0.70 | 0.45 | 1.10 | 0.85 | 0.70 | 0.45 | 1.00 | 0.85 | 0.70 | 0.45 | 24.0 |
| 26.0 | | | | | 1.05 | 0.85 | 0.70 | 0.45 | 1.00 | 0.85 | 0.70 | 0.45 | | 0.85 | 0.70 | 0.45 | | 0.85 | 0.70 | 0.45 | 26.0 |
| 28.0 | | | | | 0.90 | 0.80 | 0.70 | 0.45 | 0.70 | 0.80 | 0.70 | 0.45 | | 0.80 | 0.70 | 0.45 | | 0.80 | 0.70 | 0.45 | 28.0 |
| 30.0 | | | | | 0.65 | 0.80 | 0.70 | 0.45 | | 0.80 | 0.70 | 0.45 | | | 0.70 | 0.45 | | | 0.70 | 0.45 | 30.0 |
| 32.0 | | | | | | 0.75 | 0.70 | | | 0.60 | 0.70 | 0.40 | | | 0.70 | 0.40 | | | | 0.40 | 32.0 |
| 34.0 | | | | | | 0.50 | 0.70 | | | | 0.60 | | | | | | | | | | 34.0 |
| 36.0 | | | | | | | 0.50 | | | | | | | | | | | | | | 36.0 |
| 38.0 | | | | | | | | | | | | | | | | | | | | | 38.0 |
| 40.0 | | | | | | | | | | | | | | | | | | | | | 40.0 |
| 42.0 | | | | | | | | | | | | | | | | | | | | | 42.0 |
| 44.0 | | | | | | | | | | | | | | | | | | | | | 44.0 |
| 46.0 | | | | | | | | | | | | | | | | | | | | | 46.0 |
| 48.0 | | | | | | | | | | | | | | | | | | | | | 48.0 |
| 50.0 | | | | | | | | | | | | | | | | | | | | | 50.0 |
| 52.0 | | | | | | | | | | | | | | | | | | | | | 52.0 |
| 54.0 | | | | | | | | | | | | | | | | | | | | | 54.0 |
| 55.0 | | | | | | | | | | | | | | | | | | | | | 55.0 |
| 56.0 | | | | | | | | | | | | | | | | | | | | | 56.0 |
| 1 | 0 | 0 | 0 | 0 | 0 | 0 | 0 | 0 | 46 | 46 | 46 | 46 | 92 | 92 | 92 | 92 | 100 | 100 | 100 | 100 | 1 |
| 2 | 0 | 0 | 0 | 0 | 92 | 92 | 92 | 92 | 92 | 92 | 92 | 92 | 92 | 92 | 92 | 92 | 100 | 100 | 100 | 100 | 2 |
| 3 | 0 | 0 | 0 | 0 | 92 | 92 | 92 | 92 | 92 | 92 | 92 | 92 | 92 | 92 | 92 | 92 | 100 | 100 | 100 | 100 | 3 |
| 4 | 0 | 0 | 0 | 0 | 92 | 92 | 92 | 92 | 92 | 92 | 92 | 92 | 92 | 92 | 92 | 92 | 100 | 100 | 100 | 100 | 4 |
| 5 | 0 | 0 | 0 | 0 | 92 | 92 | 92 | 92 | 92 | 92 | 92 | 92 | 92 | 92 | 92 | 92 | 100 | 100 | 100 | 100 | 5 |
| ID | 1 | 1 | 1 | 1 | 9 | 9 | 9 | 9 | 10 | 10 | 10 | 10 | 11 | 11 | 11 | 11 | 22 | 22 | 22 | 22 | ID |
| [DEG] | 19～84 | 31～84 | 51～84 | 65～84 | 59～84 | 60～84 | 61～84 | 71～84 | 64～84 | 65～84 | 66～84 | 70～84 | 69～84 | 71～84 | 70～84 | 71～84 | 70～84 | 72～84 | 74～84 | 72～84 | [DEG] |
| | 1 | 1 | 1 | 1 | 1 | 1 | 1 | 1 | 1 | 1 | 1 | 1 | 1 | 1 | 1 | 1 | 1 | 1 | 1 | 1 | |
| | 5t | 5t | 5t | 5t | 5t | 5t | 5t | 5t | 5t | 5t | 5t | 5t | 5t | 5t | 5t | 5t | 5t | 5t | 5t | 5t | |

# フルオートジブ

| FAJ | 8.4m | 0.0 t | スマートチャート1 | JPN |
|---|---|---|---|---|

| m | 10.2 | 10.2 | 10.2 | 10.2 | 38.2 | 38.2 | 38.2 | 38.2 | 41.7 | 41.7 | 41.7 | 41.7 | 45.2 | 45.2 | 45.2 | 45.2 | 48.0 | 48.0 | 48.0 | 48.0 | m |
|---|---|---|---|---|---|---|---|---|---|---|---|---|---|---|---|---|---|---|---|---|---|
| ° | 5 | 25 | 45 | 60 | 5 | 25 | 45 | 60 | 5 | 25 | 45 | 60 | 5 | 25 | 45 | 60 | 5 | 25 | 45 | 60 | ° |
| 2.0 | 4.00 | | | | | | | | | | | | | | | | | | | | 2.0 |
| 3.0 | 4.00 | | | | | | | | | | | | | | | | | | | | 3.0 |
| 4.0 | 4.00 | 4.00 | | | | | | | | | | | | | | | | | | | 4.0 |
| 5.0 | 4.00 | 4.00 | | | | | | | | | | | | | | | | | | | 5.0 |
| 6.0 | 4.00 | 4.00 | 3.00 | | | | | | | | | | | | | | | | | | 6.0 |
| 7.0 | 4.00 | 4.00 | 2.85 | | 4.00 | | | | 4.00 | | | | | | | | | | | | 7.0 |
| 8.0 | 4.00 | 4.00 | 2.70 | 1.60 | 4.00 | | | | 4.00 | | | | 4.00 | | | | 4.00 | | | | 8.0 |
| 9.0 | 4.00 | 4.00 | 2.55 | 1.55 | 4.00 | | | | 4.00 | | | | 4.00 | | | | 4.00 | | | | 9.0 |
| 10.0 | 4.00 | 3.90 | 2.45 | 1.50 | 4.00 | 4.00 | | | 4.00 | 4.00 | | | 4.00 | | | | 4.00 | | | | 10.0 |
| 11.0 | 4.00 | 3.70 | 2.35 | | 4.00 | 4.00 | | | 4.00 | 4.00 | | | 4.00 | 4.00 | | | 4.00 | | | | 11.0 |
| 12.0 | 4.00 | 3.50 | 2.30 | | 4.00 | 4.00 | 2.65 | 1.55 | 4.00 | 4.00 | 2.65 | | 4.00 | 3.95 | | | 4.00 | 3.70 | | | 12.0 |
| 13.0 | 4.00 | 3.35 | | | 4.00 | 4.00 | 2.60 | 1.50 | 4.00 | 3.90 | 2.60 | 1.50 | 4.00 | 3.80 | 2.60 | | 3.95 | 3.55 | | | 13.0 |
| 14.0 | 4.00 | 3.20 | | | 4.00 | 3.85 | 2.55 | 1.50 | 4.00 | 3.75 | 2.55 | 1.50 | 4.00 | 3.65 | 2.55 | 1.50 | 3.85 | 3.45 | 2.60 | 1.50 | 14.0 |
| 16.0 | | | | | 4.00 | 3.60 | 2.45 | 1.45 | 3.95 | 3.50 | 2.45 | 1.45 | 3.85 | 3.40 | 2.45 | 1.45 | 3.55 | 3.20 | 2.50 | 1.45 | 16.0 |
| 18.0 | | | | | 3.75 | 3.35 | 2.35 | 1.40 | 3.65 | 3.25 | 2.35 | 1.40 | 3.55 | 3.20 | 2.40 | 1.40 | 3.30 | 3.05 | 2.40 | 1.40 | 18.0 |
| 20.0 | | | | | 3.50 | 3.15 | 2.25 | 1.40 | 3.40 | 3.05 | 2.30 | 1.40 | 3.30 | 3.00 | 2.30 | 1.40 | 3.05 | 2.85 | 2.30 | 1.40 | 20.0 |
| 22.0 | | | | | 3.25 | 2.95 | 2.20 | 1.35 | 3.20 | 2.90 | 2.20 | 1.35 | 3.10 | 2.80 | 2.25 | 1.35 | 2.70 | 2.60 | 2.25 | 1.35 | 22.0 |
| 24.0 | | | | | 3.05 | 2.80 | 2.15 | | 2.95 | 2.75 | 2.15 | 1.35 | 2.90 | 2.65 | 2.15 | 1.35 | 2.35 | 2.25 | 2.20 | 1.35 | 24.0 |
| 26.0 | | | | | 2.85 | 2.65 | 2.10 | | 2.80 | 2.60 | 2.10 | | 2.70 | 2.55 | 2.10 | | 2.00 | 1.95 | 1.95 | 1.30 | 26.0 |
| 28.0 | | | | | 2.60 | 2.55 | 2.05 | | 2.60 | 2.45 | 2.05 | | 2.55 | 2.40 | 2.05 | | 1.75 | 1.70 | 1.75 | | 28.0 |
| 30.0 | | | | | 2.35 | 2.40 | 2.00 | | 2.50 | 2.35 | 2.00 | | 2.40 | 2.30 | 2.00 | | 1.50 | 1.50 | 1.50 | | 30.0 |
| 32.0 | | | | | 2.05 | 2.10 | | | 2.20 | 2.25 | 2.00 | | 1.95 | 2.20 | 2.00 | | 1.30 | 1.30 | 1.30 | | 32.0 |
| 34.0 | | | | | 1.85 | 1.90 | | | 1.80 | 1.95 | | | 1.50 | 1.70 | 1.85 | | 1.10 | 1.10 | 1.15 | | 34.0 |
| 36.0 | | | | | 1.60 | 1.65 | | | 1.40 | 1.55 | | | 1.15 | 1.30 | | | 0.95 | 0.95 | 0.95 | | 36.0 |
| 38.0 | | | | | 1.25 | 1.35 | | | 1.10 | 1.20 | | | 0.80 | 0.95 | | | 0.75 | 0.80 | | | 38.0 |
| 40.0 | | | | | 0.95 | | | | 0.80 | 0.90 | | | 0.50 | 0.65 | | | 0.50 | 0.65 | | | 40.0 |
| 42.0 | | | | | 0.70 | | | | 0.50 | 0.60 | | | | | | | | | | | 42.0 |
| 44.0 | | | | | | | | | | | | | | | | | | | | | 44.0 |
| 46.0 | | | | | | | | | | | | | | | | | | | | | 46.0 |
| 48.0 | | | | | | | | | | | | | | | | | | | | | 48.0 |
| 50.0 | | | | | | | | | | | | | | | | | | | | | 50.0 |
| 52.0 | | | | | | | | | | | | | | | | | | | | | 52.0 |
| 54.0 | | | | | | | | | | | | | | | | | | | | | 54.0 |
| 55.0 | | | | | | | | | | | | | | | | | | | | | 55.0 |
| 56.0 | | | | | | | | | | | | | | | | | | | | | 56.0 |
| 1 | 0 | 0 | 0 | 0 | 0 | 0 | 0 | 0 | 46 | 46 | 46 | 46 | 92 | 92 | 92 | 92 | 100 | 100 | 100 | 100 | 1 |
| 2 | 0 | 0 | 0 | 0 | 92 | 92 | 92 | 92 | 92 | 92 | 92 | 92 | 92 | 92 | 92 | 92 | 100 | 100 | 100 | 100 | 2 |
| 3 | 0 | 0 | 0 | 0 | 92 | 92 | 92 | 92 | 92 | 92 | 92 | 92 | 92 | 92 | 92 | 92 | 100 | 100 | 100 | 100 | 3 |
| 4 | 0 | 0 | 0 | 0 | 92 | 92 | 92 | 92 | 92 | 92 | 92 | 92 | 92 | 92 | 92 | 92 | 100 | 100 | 100 | 100 | 4 |
| 5 | 0 | 0 | 0 | 0 | 92 | 92 | 92 | 92 | 92 | 92 | 92 | 92 | 92 | 92 | 92 | 92 | 100 | 100 | 100 | 100 | 5 |
| ID | 1 | 1 | 1 | 1 | 9 | 9 | 9 | 9 | 10 | 10 | 10 | 10 | 11 | 11 | 11 | 11 | 22 | 22 | 22 | 22 | ID |
| [DEG] | 28～84 | 35～84 | 54～84 | 68～84 | 18～84 | 35～84 | 54～84 | 68～84 | 30～84 | 33～84 | 54～84 | 67～84 | 41～84 | 45～84 | 55～84 | 69～84 | 45～84 | 48～84 | 55～84 | 68～84 | [DEG] |
| | 1 | 1 | 1 | 1 | 1 | 1 | 1 | 1 | 1 | 1 | 1 | 1 | 1 | 1 | 1 | 1 | 1 | 1 | 1 | 1 | |
| | 5t | 5t | 5t | 5t | 5t | 5t | 5t | 5t | 5t | 5t | 5t | 5t | 5t | 5t | 5t | 5t | 5t | 5t | 5t | 5t | |

| FAJ | 13.1m | 0.0 t | スマートチャート1 | JPN |
|---|---|---|---|---|

| m | 10.2 | 10.2 | 10.2 | 10.2 | 38.2 | 38.2 | 38.2 | 38.2 | 41.7 | 41.7 | 41.7 | 41.7 | 45.2 | 45.2 | 45.2 | 45.2 | 48.0 | 48.0 | 48.0 | 48.0 | m |
|---|---|---|---|---|---|---|---|---|---|---|---|---|---|---|---|---|---|---|---|---|---|
| ° | 5 | 25 | 45 | 60 | 5 | 25 | 45 | 60 | 5 | 25 | 45 | 60 | 5 | 25 | 45 | 60 | 5 | 25 | 45 | 60 | ° |
| 2.0 | 2.80 | | | | | | | | | | | | | | | | | | | | 2.0 |
| 3.0 | 2.80 | | | | | | | | | | | | | | | | | | | | 3.0 |
| 4.0 | 2.80 | | | | | | | | | | | | | | | | | | | | 4.0 |
| 5.0 | 2.80 | | | | | | | | | | | | | | | | | | | | 5.0 |
| 6.0 | 2.80 | | | | | | | | | | | | | | | | | | | | 6.0 |
| 7.0 | 2.80 | 2.60 | | | | | | | | | | | | | | | | | | | 7.0 |
| 8.0 | 2.80 | 2.45 | | | 2.80 | | | | 2.80 | | | | | | | | | | | | 8.0 |
| 9.0 | 2.80 | 2.30 | | | 2.80 | | | | 2.80 | | | | 2.80 | | | | | | | | 9.0 |
| 10.0 | 2.65 | 2.20 | 1.75 | | 2.80 | | | | 2.80 | | | | 2.80 | | | | 2.65 | | | | 10.0 |
| 11.0 | 2.50 | 2.10 | 1.65 | | 2.80 | | | | 2.80 | | | | 2.80 | | | | 2.65 | | | | 11.0 |
| 12.0 | 2.35 | 2.00 | 1.55 | 0.90 | 2.80 | | | | 2.80 | | | | 2.75 | | | | 2.60 | | | | 12.0 |
| 13.0 | 2.25 | 1.95 | 1.50 | 0.85 | 2.80 | 2.20 | | | 2.80 | 2.20 | | | 2.70 | | | | 2.55 | | | | 13.0 |
| 14.0 | 2.10 | 1.85 | 1.45 | 0.85 | 2.80 | 2.15 | | | 2.75 | 2.15 | | | 2.65 | 2.15 | | | 2.55 | | | | 14.0 |
| 16.0 | 1.95 | 1.75 | 1.35 | | 2.70 | 2.05 | 1.55 | | 2.65 | 2.05 | 1.55 | | 2.60 | 2.05 | | | 2.45 | 2.05 | | | 16.0 |
| 18.0 | 1.80 | 1.65 | | | 2.55 | 2.00 | 1.50 | 0.80 | 2.55 | 2.00 | 1.50 | 0.80 | 2.50 | 2.00 | 1.50 | 0.80 | 2.40 | 1.95 | 1.50 | | 18.0 |
| 20.0 | 1.70 | | | | 2.45 | 1.90 | 1.40 | 0.80 | 2.45 | 1.90 | 1.45 | 0.80 | 2.45 | 1.90 | 1.45 | 0.80 | 2.35 | 1.90 | 1.45 | 0.80 | 20.0 |
| 22.0 | | | | | 2.30 | 1.85 | 1.35 | 0.75 | 2.35 | 1.85 | 1.35 | 0.75 | 2.35 | 1.85 | 1.40 | 0.75 | 2.30 | 1.85 | 1.40 | 0.75 | 22.0 |
| 24.0 | | | | | 2.20 | 1.80 | 1.30 | 0.75 | 2.25 | 1.80 | 1.35 | 0.75 | 2.25 | 1.80 | 1.35 | 0.75 | 2.25 | 1.80 | 1.35 | 0.75 | 24.0 |
| 26.0 | | | | | 2.10 | 1.75 | 1.25 | 0.75 | 2.15 | 1.75 | 1.30 | 0.75 | 2.15 | 1.75 | 1.30 | 0.75 | 2.00 | 1.75 | 1.30 | 0.75 | 26.0 |
| 28.0 | | | | | 2.00 | 1.70 | 1.25 | | 2.05 | 1.70 | 1.25 | 0.75 | 2.10 | 1.75 | 1.25 | 0.70 | 1.75 | 1.75 | 1.25 | 0.70 | 28.0 |
| 30.0 | | | | | 1.95 | 1.70 | 1.20 | | 2.00 | 1.70 | 1.20 | | 2.00 | 1.70 | 1.20 | 0.70 | 1.55 | 1.55 | 1.20 | 0.70 | 30.0 |
| 32.0 | | | | | 1.90 | 1.65 | 1.20 | | 1.90 | 1.65 | 1.20 | | 1.95 | 1.65 | 1.20 | | 1.35 | 1.35 | 1.20 | | 32.0 |
| 34.0 | | | | | 1.80 | 1.60 | 1.15 | | 1.85 | 1.65 | 1.15 | | 1.90 | 1.65 | 1.15 | | 1.15 | 1.20 | 1.15 | | 34.0 |
| 36.0 | | | | | 1.75 | 1.60 | | | 1.80 | 1.60 | 1.15 | | 1.55 | 1.60 | 1.15 | | 1.00 | 1.00 | 1.05 | | 36.0 |
| 38.0 | | | | | 1.60 | 1.60 | | | 1.50 | 1.60 | | | 1.20 | 1.50 | 1.10 | | 0.85 | 0.90 | 0.90 | | 38.0 |
| 40.0 | | | | | 1.35 | 1.45 | | | 1.20 | 1.40 | | | 0.90 | 1.15 | 1.10 | | 0.70 | 0.75 | 0.80 | | 40.0 |
| 42.0 | | | | | 1.10 | 1.20 | | | 0.90 | 1.10 | | | 0.65 | 0.85 | | | 0.60 | 0.65 | | | 42.0 |
| 44.0 | | | | | 0.85 | | | | 0.65 | 0.80 | | | | 0.60 | | | | 0.55 | | | 44.0 |
| 46.0 | | | | | 0.65 | | | | | 0.55 | | | | | | | | | | | 46.0 |
| 48.0 | | | | | | | | | | | | | | | | | | | | | 48.0 |
| 50.0 | | | | | | | | | | | | | | | | | | | | | 50.0 |
| 52.0 | | | | | | | | | | | | | | | | | | | | | 52.0 |
| 54.0 | | | | | | | | | | | | | | | | | | | | | 54.0 |
| 55.0 | | | | | | | | | | | | | | | | | | | | | 55.0 |
| 56.0 | | | | | | | | | | | | | | | | | | | | | 56.0 |
| 1 | 0 | 0 | 0 | 0 | 0 | 0 | 0 | 0 | 46 | 46 | 46 | 46 | 92 | 92 | 92 | 92 | 100 | 100 | 100 | 100 | 1 |
| 2 | 0 | 0 | 0 | 0 | 92 | 92 | 92 | 92 | 92 | 92 | 92 | 92 | 92 | 92 | 92 | 92 | 100 | 100 | 100 | 100 | 2 |
| 3 | 0 | 0 | 0 | 0 | 92 | 92 | 92 | 92 | 92 | 92 | 92 | 92 | 92 | 92 | 92 | 92 | 100 | 100 | 100 | 100 | 3 |
| 4 | 0 | 0 | 0 | 0 | 92 | 92 | 92 | 92 | 92 | 92 | 92 | 92 | 92 | 92 | 92 | 92 | 100 | 100 | 100 | 100 | 4 |
| 5 | 0 | 0 | 0 | 0 | 92 | 92 | 92 | 92 | 92 | 92 | 92 | 92 | 92 | 92 | 92 | 92 | 100 | 100 | 100 | 100 | 5 |
| ID | 1 | 1 | 1 | 1 | 9 | 9 | 9 | 9 | 10 | 10 | 10 | 10 | 11 | 11 | 11 | 11 | 22 | 22 | 22 | 22 | ID |
| [DEG] | 0～84 | 40～84 | 57～84 | 71～84 | 22～84 | 38～84 | 56～84 | 69～84 | 36～84 | 37～84 | 57～84 | 68～84 | 45～84 | 46～84 | 54～84 | 68～84 | 48～84 | 49～84 | 57～84 | 70～84 | [DEG] |
| | 1 | 1 | 1 | 1 | 1 | 1 | 1 | 1 | 1 | 1 | 1 | 1 | 1 | 1 | 1 | 1 | 1 | 1 | 1 | 1 | |
| | 5t | 5t | 5t | 5t | 5t | 5t | 5t | 5t | 5t | 5t | 5t | 5t | 5t | 5t | 5t | 5t | 5t | 5t | 5t | 5t | |

| FAJ | 17.7m | 0.0 t | スマートチャート1 | JPN |
|---|---|---|---|---|

| m | 10.2 | 10.2 | 10.2 | 10.2 | 38.2 | 38.2 | 38.2 | 38.2 | 41.7 | 41.7 | 41.7 | 41.7 | 45.2 | 45.2 | 45.2 | 45.2 | 48.0 | 48.0 | 48.0 | 48.0 | m |
|---|---|---|---|---|---|---|---|---|---|---|---|---|---|---|---|---|---|---|---|---|---|
| ° | 5 | 25 | 45 | 60 | 5 | 25 | 45 | 60 | 5 | 25 | 45 | 60 | 5 | 25 | 45 | 60 | 5 | 25 | 45 | 60 | ° |
| 2.0 | | | | | | | | | | | | | | | | | | | | | 2.0 |
| 3.0 | 1.50 | | | | | | | | | | | | | | | | | | | | 3.0 |
| 4.0 | 1.50 | | | | | | | | | | | | | | | | | | | | 4.0 |
| 5.0 | 1.50 | | | | | | | | | | | | | | | | | | | | 5.0 |
| 6.0 | 1.50 | | | | | | | | | | | | | | | | | | | | 6.0 |
| 7.0 | 1.50 | | | | | | | | | | | | | | | | | | | | 7.0 |
| 8.0 | 1.50 | | | | 1.50 | | | | | | | | | | | | | | | | 8.0 |
| 9.0 | 1.50 | 1.25 | | | 1.50 | | | | 1.50 | | | | 1.45 | | | | | | | | 9.0 |
| 10.0 | 1.45 | 1.15 | | | 1.50 | | | | 1.50 | | | | 1.45 | | | | 1.35 | | | | 10.0 |
| 11.0 | 1.35 | 1.10 | | | 1.50 | | | | 1.45 | | | | 1.40 | | | | 1.35 | | | | 11.0 |
| 12.0 | 1.25 | 1.05 | | | 1.45 | | | | 1.45 | | | | 1.40 | | | | 1.35 | | | | 12.0 |
| 13.0 | 1.20 | 1.00 | | | 1.45 | | | | 1.40 | | | | 1.35 | | | | 1.30 | | | | 13.0 |
| 14.0 | 1.15 | 0.95 | 0.85 | | 1.40 | | | | 1.40 | | | | 1.35 | | | | 1.30 | | | | 14.0 |
| 16.0 | 1.00 | 0.90 | 0.80 | 0.55 | 1.35 | 1.00 | | | 1.30 | 1.00 | | | 1.30 | 1.00 | | | 1.25 | | | | 16.0 |
| 18.0 | 0.95 | 0.85 | 0.75 | 0.50 | 1.30 | 0.95 | | | 1.25 | 0.95 | | | 1.25 | 0.95 | | | 1.20 | 0.95 | | | 18.0 |
| 20.0 | 0.85 | 0.80 | 0.75 | 0.50 | 1.20 | 0.90 | 0.75 | | 1.20 | 0.90 | 0.75 | | 1.20 | 0.90 | | | 1.15 | 0.90 | | | 20.0 |
| 22.0 | 0.80 | 0.75 | 0.70 | | 1.15 | 0.90 | 0.75 | 0.50 | 1.15 | 0.90 | 0.75 | 0.50 | 1.15 | 0.90 | 0.75 | | 1.15 | 0.90 | 0.75 | | 22.0 |
| 24.0 | 0.75 | 0.75 | | | 1.10 | 0.85 | 0.70 | 0.45 | 1.10 | 0.85 | 0.70 | 0.45 | 1.10 | 0.85 | 0.70 | 0.45 | 1.10 | 0.85 | 0.70 | 0.45 | 24.0 |
| 26.0 | | | | | 1.05 | 0.85 | 0.70 | 0.45 | 1.05 | 0.85 | 0.70 | 0.45 | 1.05 | 0.85 | 0.70 | 0.45 | 1.05 | 0.85 | 0.70 | 0.45 | 26.0 |
| 28.0 | | | | | 1.00 | 0.80 | 0.70 | 0.45 | 1.00 | 0.80 | 0.70 | 0.45 | 1.05 | 0.80 | 0.70 | 0.45 | 1.00 | 0.80 | 0.70 | 0.45 | 28.0 |
| 30.0 | | | | | 0.95 | 0.80 | 0.70 | 0.45 | 0.95 | 0.80 | 0.70 | 0.45 | 1.00 | 0.80 | 0.70 | 0.45 | 1.00 | 0.80 | 0.70 | 0.45 | 30.0 |
| 32.0 | | | | | 0.90 | 0.75 | 0.70 | | 0.95 | 0.75 | 0.70 | 0.40 | 0.95 | 0.75 | 0.70 | 0.40 | 0.95 | 0.75 | 0.70 | 0.40 | 32.0 |
| 34.0 | | | | | 0.85 | 0.75 | 0.70 | | 0.90 | 0.75 | 0.70 | | 0.90 | 0.75 | 0.70 | 0.40 | 0.90 | 0.75 | 0.70 | 0.40 | 34.0 |
| 36.0 | | | | | 0.85 | 0.75 | 0.70 | | 0.85 | 0.75 | 0.70 | | 0.90 | 0.75 | 0.70 | | 0.90 | 0.75 | 0.65 | 0.40 | 36.0 |
| 38.0 | | | | | 0.80 | 0.70 | 0.70 | | 0.85 | 0.70 | 0.70 | | 0.85 | 0.70 | 0.65 | | 0.85 | 0.70 | 0.65 | | 38.0 |
| 40.0 | | | | | 0.80 | 0.70 | 0.70 | | 0.80 | 0.70 | 0.70 | | 0.80 | 0.70 | 0.65 | | 0.75 | 0.70 | 0.65 | | 40.0 |
| 42.0 | | | | | 0.75 | 0.70 | | | 0.80 | 0.70 | 0.70 | | 0.80 | 0.70 | 0.65 | | 0.65 | 0.70 | 0.65 | | 42.0 |
| 44.0 | | | | | 0.75 | 0.70 | | | 0.75 | 0.70 | | | 0.75 | 0.70 | 0.65 | | 0.55 | 0.60 | 0.65 | | 44.0 |
| 46.0 | | | | | 0.75 | 0.70 | | | 0.75 | 0.70 | | | 0.50 | 0.70 | | | 0.45 | 0.50 | 0.55 | | 46.0 |
| 48.0 | | | | | 0.70 | 0.70 | | | 0.55 | 0.70 | | | | 0.55 | | | | 0.40 | | | 48.0 |
| 50.0 | | | | | 0.55 | | | | 0.40 | 0.50 | | | | | | | | | | | 50.0 |
| 52.0 | | | | | 0.40 | | | | | | | | | | | | | | | | 52.0 |
| 54.0 | | | | | | | | | | | | | | | | | | | | | 54.0 |
| 55.0 | | | | | | | | | | | | | | | | | | | | | 55.0 |
| 56.0 | | | | | | | | | | | | | | | | | | | | | 56.0 |
| 1 | 0 | 0 | 0 | 0 | 0 | 0 | 0 | 0 | 46 | 46 | 46 | 46 | 92 | 92 | 92 | 92 | 100 | 100 | 100 | 100 | 1 |
| 2 | 0 | 0 | 0 | 0 | 92 | 92 | 92 | 92 | 92 | 92 | 92 | 92 | 92 | 92 | 92 | 92 | 100 | 100 | 100 | 100 | 2 |
| 3 | 0 | 0 | 0 | 0 | 92 | 92 | 92 | 92 | 92 | 92 | 92 | 92 | 92 | 92 | 92 | 92 | 100 | 100 | 100 | 100 | 3 |
| 4 | 0 | 0 | 0 | 0 | 92 | 92 | 92 | 92 | 92 | 92 | 92 | 92 | 92 | 92 | 92 | 92 | 100 | 100 | 100 | 100 | 4 |
| 5 | 0 | 0 | 0 | 0 | 92 | 92 | 92 | 92 | 92 | 92 | 92 | 92 | 92 | 92 | 92 | 92 | 100 | 100 | 100 | 100 | 5 |
| ID | 1 | 1 | 1 | 1 | 9 | 9 | 9 | 9 | 10 | 10 | 10 | 10 | 11 | 11 | 11 | 11 | 22 | 22 | 22 | 22 | ID |
| [DEG] | 19～84 | 31～84 | 51～84 | 65～84 | 17～84 | 37～84 | 54～84 | 71～84 | 34～84 | 40～84 | 55～84 | 70～84 | 46～84 | 49～84 | 57～84 | 69～84 | 49～84 | 52～84 | 57～84 | 68～84 | [DEG] |
| | 1 | 1 | 1 | 1 | 1 | 1 | 1 | 1 | 1 | 1 | 1 | 1 | 1 | 1 | 1 | 1 | 1 | 1 | 1 | 1 | |
| | 5t | 5t | 5t | 5t | 5t | 5t | 5t | 5t | 5t | 5t | 5t | 5t | 5t | 5t | 5t | 5t | 5t | 5t | 5t | 5t | |

| FAJ | 8.4m | 0.0 t | スマートチャート2 | JPN |
|---|---|---|---|---|

| m | 10.2 | 10.2 | 10.2 | 10.2 | 38.2 | 38.2 | 38.2 | 38.2 | 41.7 | 41.7 | 41.7 | 41.7 | 45.2 | 45.2 | 45.2 | 45.2 | 48.0 | 48.0 | 48.0 | 48.0 | m |
|---|---|---|---|---|---|---|---|---|---|---|---|---|---|---|---|---|---|---|---|---|---|
| ° | 5 | 25 | 45 | 60 | 5 | 25 | 45 | 60 | 5 | 25 | 45 | 60 | 5 | 25 | 45 | 60 | 5 | 25 | 45 | 60 | ° |
| 2.0 | 4.00 | | | | | | | | | | | | | | | | | | | | 2.0 |
| 3.0 | 4.00 | | | | | | | | | | | | | | | | | | | | 3.0 |
| 4.0 | 4.00 | 4.00 | | | | | | | | | | | | | | | | | | | 4.0 |
| 5.0 | 4.00 | 4.00 | | | | | | | | | | | | | | | | | | | 5.0 |
| 6.0 | 4.00 | 4.00 | 3.00 | | | | | | | | | | | | | | | | | | 6.0 |
| 7.0 | 4.00 | 4.00 | 2.85 | | 4.00 | | | | 4.00 | | | | | | | | | | | | 7.0 |
| 8.0 | 4.00 | 4.00 | 2.70 | 1.60 | 4.00 | | | | 4.00 | | | | 4.00 | | | | 4.00 | | | | 8.0 |
| 9.0 | 4.00 | 4.00 | 2.55 | 1.55 | 4.00 | | | | 4.00 | | | | 4.00 | | | | 4.00 | | | | 9.0 |
| 10.0 | 4.00 | 3.90 | 2.45 | 1.50 | 4.00 | 4.00 | | | 4.00 | 4.00 | | | 4.00 | | | | 4.00 | | | | 10.0 |
| 11.0 | 4.00 | 3.70 | 2.35 | | 4.00 | 4.00 | | | 4.00 | 4.00 | | | 4.00 | 4.00 | | | 4.00 | | | | 11.0 |
| 12.0 | 4.00 | 3.50 | 2.30 | | 4.00 | 4.00 | 2.65 | 1.55 | 4.00 | 4.00 | 2.65 | | 4.00 | 3.95 | | | 4.00 | 3.70 | | | 12.0 |
| 13.0 | 4.00 | 3.35 | | | 4.00 | 4.00 | 2.60 | 1.50 | 4.00 | 3.90 | 2.60 | 1.50 | 4.00 | 3.80 | 2.60 | | 3.95 | 3.55 | | | 13.0 |
| 14.0 | 4.00 | 3.20 | | | 4.00 | 3.85 | 2.55 | 1.50 | 4.00 | 3.75 | 2.55 | 1.50 | 4.00 | 3.65 | 2.55 | 1.50 | 3.85 | 3.45 | 2.60 | 1.50 | 14.0 |
| 16.0 | | | | | 4.00 | 3.60 | 2.45 | 1.45 | 3.95 | 3.50 | 2.45 | 1.45 | 3.85 | 3.40 | 2.45 | 1.45 | 3.55 | 3.20 | 2.50 | 1.45 | 16.0 |
| 18.0 | | | | | 3.75 | 3.35 | 2.35 | 1.40 | 3.65 | 3.25 | 2.35 | 1.40 | 3.55 | 3.20 | 2.40 | 1.40 | 3.30 | 3.05 | 2.40 | 1.40 | 18.0 |
| 20.0 | | | | | 3.50 | 3.15 | 2.25 | 1.40 | 3.40 | 3.05 | 2.30 | 1.40 | 3.30 | 3.00 | 2.30 | 1.40 | 3.05 | 2.85 | 2.30 | 1.40 | 20.0 |
| 22.0 | | | | | 3.25 | 2.95 | 2.20 | 1.35 | 3.20 | 2.90 | 2.20 | 1.35 | 3.10 | 2.80 | 2.25 | 1.35 | 2.70 | 2.60 | 2.25 | 1.35 | 22.0 |
| 24.0 | | | | | 3.05 | 2.80 | 2.15 | | 2.95 | 2.75 | 2.15 | 1.35 | 2.90 | 2.65 | 2.15 | 1.35 | 2.35 | 2.25 | 2.20 | 1.35 | 24.0 |
| 26.0 | | | | | 2.85 | 2.65 | 2.10 | | 2.80 | 2.60 | 2.10 | | 2.70 | 2.55 | 2.10 | | 2.00 | 1.95 | 1.95 | 1.30 | 26.0 |
| 28.0 | | | | | 2.60 | 2.55 | 2.05 | | 2.45 | 2.45 | 2.05 | | 2.20 | 2.40 | 2.05 | | 1.75 | 1.70 | 1.75 | | 28.0 |
| 30.0 | | | | | 2.15 | 2.30 | 2.00 | | 2.00 | 2.20 | 2.00 | | 1.75 | 2.00 | 2.00 | | 1.50 | 1.50 | 1.50 | | 30.0 |
| 32.0 | | | | | 1.70 | 1.90 | | | 1.55 | 1.75 | 1.85 | | 1.30 | 1.55 | 1.65 | | 1.25 | 1.30 | 1.30 | | 32.0 |
| 34.0 | | | | | 1.35 | 1.50 | | | 1.20 | 1.35 | | | 0.95 | 1.15 | 1.25 | | 0.90 | 1.10 | 1.15 | | 34.0 |
| 36.0 | | | | | 1.05 | 1.15 | | | 0.85 | 1.00 | | | 0.65 | 0.80 | | | 0.60 | 0.80 | 0.90 | | 36.0 |
| 38.0 | | | | | 0.75 | 0.85 | | | 0.60 | 0.70 | | | | 0.50 | | | | 0.45 | | | 38.0 |
| 40.0 | | | | | 0.50 | | | | | 0.45 | | | | | | | | | | | 40.0 |
| 42.0 | | | | | | | | | | | | | | | | | | | | | 42.0 |
| 44.0 | | | | | | | | | | | | | | | | | | | | | 44.0 |
| 46.0 | | | | | | | | | | | | | | | | | | | | | 46.0 |
| 48.0 | | | | | | | | | | | | | | | | | | | | | 48.0 |
| 50.0 | | | | | | | | | | | | | | | | | | | | | 50.0 |
| 52.0 | | | | | | | | | | | | | | | | | | | | | 52.0 |
| 54.0 | | | | | | | | | | | | | | | | | | | | | 54.0 |
| 55.0 | | | | | | | | | | | | | | | | | | | | | 55.0 |
| 56.0 | | | | | | | | | | | | | | | | | | | | | 56.0 |
| 1 | 0 | 0 | 0 | 0 | 0 | 0 | 0 | 0 | 46 | 46 | 46 | 46 | 92 | 92 | 92 | 92 | 100 | 100 | 100 | 100 | 1 |
| 2 | 0 | 0 | 0 | 0 | 92 | 92 | 92 | 92 | 92 | 92 | 92 | 92 | 92 | 92 | 92 | 92 | 100 | 100 | 100 | 100 | 2 |
| 3 | 0 | 0 | 0 | 0 | 92 | 92 | 92 | 92 | 92 | 92 | 92 | 92 | 92 | 92 | 92 | 92 | 100 | 100 | 100 | 100 | 3 |
| 4 | 0 | 0 | 0 | 0 | 92 | 92 | 92 | 92 | 92 | 92 | 92 | 92 | 92 | 92 | 92 | 92 | 100 | 100 | 100 | 100 | 4 |
| 5 | 0 | 0 | 0 | 0 | 92 | 92 | 92 | 92 | 92 | 92 | 92 | 92 | 92 | 92 | 92 | 92 | 100 | 100 | 100 | 100 | 5 |
| ID | 1 | 1 | 1 | 1 | 9 | 9 | 9 | 9 | 10 | 10 | 10 | 10 | 11 | 11 | 11 | 11 | 22 | 22 | 22 | 22 | ID |
| [DEG] | 28～84 | 35～84 | 54～84 | 68～84 | 26～84 | 35～84 | 54～84 | 68～84 | 39～84 | 38～84 | 54～84 | 67～84 | 47～84 | 48～84 | 55～84 | 69～84 | 50～84 | 51～84 | 55～84 | 68～84 | [DEG] |
| | 1 | 1 | 1 | 1 | 1 | 1 | 1 | 1 | 1 | 1 | 1 | 1 | 1 | 1 | 1 | 1 | 1 | 1 | 1 | 1 | |
| | 5t | 5t | 5t | 5t | 5t | 5t | 5t | 5t | 5t | 5t | 5t | 5t | 5t | 5t | 5t | 5t | 5t | 5t | 5t | 5t | |

# フルオートジブ

| FAJ | 13.1m | 0.0 t | スマートチャート2 | JPN |
|---|---|---|---|---|

| m | 10.2 | 10.2 | 10.2 | 10.2 | 38.2 | 38.2 | 38.2 | 38.2 | 41.7 | 41.7 | 41.7 | 41.7 | 45.2 | 45.2 | 45.2 | 45.2 | 48.0 | 48.0 | 48.0 | 48.0 | m |
|---|---|---|---|---|---|---|---|---|---|---|---|---|---|---|---|---|---|---|---|---|---|
| ° | 5 | 25 | 45 | 60 | 5 | 25 | 45 | 60 | 5 | 25 | 45 | 60 | 5 | 25 | 45 | 60 | 5 | 25 | 45 | 60 | ° |
| 2.0 | 2.80 | | | | | | | | | | | | | | | | | | | | 2.0 |
| 3.0 | 2.80 | | | | | | | | | | | | | | | | | | | | 3.0 |
| 4.0 | 2.80 | | | | | | | | | | | | | | | | | | | | 4.0 |
| 5.0 | 2.80 | | | | | | | | | | | | | | | | | | | | 5.0 |
| 6.0 | 2.80 | | | | | | | | | | | | | | | | | | | | 6.0 |
| 7.0 | 2.80 | 2.60 | | | | | | | | | | | | | | | | | | | 7.0 |
| 8.0 | 2.80 | 2.45 | | | 2.80 | | | | 2.80 | | | | | | | | | | | | 8.0 |
| 9.0 | 2.80 | 2.30 | | | 2.80 | | | | 2.80 | | | | 2.80 | | | | | | | | 9.0 |
| 10.0 | 2.65 | 2.20 | 1.75 | | 2.80 | | | | 2.80 | | | | 2.80 | | | | 2.65 | | | | 10.0 |
| 11.0 | 2.50 | 2.10 | 1.65 | | 2.80 | | | | 2.80 | | | | 2.80 | | | | 2.65 | | | | 11.0 |
| 12.0 | 2.35 | 2.00 | 1.55 | 0.90 | 2.80 | | | | 2.80 | | | | 2.75 | | | | 2.60 | | | | 12.0 |
| 13.0 | 2.25 | 1.95 | 1.50 | 0.85 | 2.80 | 2.20 | | | 2.80 | 2.20 | | | 2.70 | | | | 2.55 | | | | 13.0 |
| 14.0 | 2.10 | 1.85 | 1.45 | 0.85 | 2.80 | 2.15 | | | 2.75 | 2.15 | | | 2.65 | 2.15 | | | 2.55 | | | | 14.0 |
| 16.0 | 1.95 | 1.75 | 1.35 | | 2.70 | 2.05 | 1.55 | | 2.65 | 2.05 | 1.55 | | 2.60 | 2.05 | | | 2.45 | 2.05 | | | 16.0 |
| 18.0 | 1.80 | 1.65 | | | 2.55 | 2.00 | 1.50 | 0.80 | 2.55 | 2.00 | 1.50 | 0.80 | 2.50 | 2.00 | 1.50 | 0.80 | 2.40 | 1.95 | 1.50 | | 18.0 |
| 20.0 | 1.70 | | | | 2.45 | 1.90 | 1.40 | 0.80 | 2.45 | 1.90 | 1.45 | 0.80 | 2.45 | 1.90 | 1.45 | 0.80 | 2.35 | 1.90 | 1.45 | 0.80 | 20.0 |
| 22.0 | | | | | 2.30 | 1.85 | 1.35 | 0.75 | 2.35 | 1.85 | 1.35 | 0.75 | 2.35 | 1.85 | 1.40 | 0.75 | 2.30 | 1.85 | 1.40 | 0.75 | 22.0 |
| 24.0 | | | | | 2.20 | 1.80 | 1.30 | 0.75 | 2.25 | 1.80 | 1.35 | 0.75 | 2.25 | 1.80 | 1.35 | 0.75 | 2.25 | 1.80 | 1.35 | 0.75 | 24.0 |
| 26.0 | | | | | 2.10 | 1.75 | 1.25 | 0.75 | 2.15 | 1.75 | 1.30 | 0.75 | 2.15 | 1.75 | 1.30 | 0.75 | 2.00 | 1.75 | 1.30 | 0.75 | 26.0 |
| 28.0 | | | | | 2.00 | 1.70 | 1.25 | | 2.05 | 1.70 | 1.25 | 0.75 | 2.10 | 1.75 | 1.25 | 0.70 | 1.75 | 1.75 | 1.25 | 0.70 | 28.0 |
| 30.0 | | | | | 1.95 | 1.70 | 1.20 | | 2.00 | 1.70 | 1.20 | | 2.00 | 1.70 | 1.20 | 0.70 | 1.55 | 1.55 | 1.20 | 0.70 | 30.0 |
| 32.0 | | | | | 1.90 | 1.65 | 1.20 | | 1.90 | 1.65 | 1.20 | | 1.70 | 1.65 | 1.20 | | 1.35 | 1.35 | 1.20 | | 32.0 |
| 34.0 | | | | | 1.75 | 1.60 | 1.15 | | 1.55 | 1.65 | 1.15 | | 1.35 | 1.65 | 1.15 | | 1.15 | 1.20 | 1.15 | | 34.0 |
| 36.0 | | | | | 1.40 | 1.60 | | | 1.25 | 1.50 | 1.15 | | 1.00 | 1.30 | 1.15 | | 0.95 | 1.00 | 1.05 | | 36.0 |
| 38.0 | | | | | 1.10 | 1.30 | | | 0.95 | 1.15 | | | 0.70 | 0.95 | 1.10 | | 0.65 | 0.90 | 0.90 | | 38.0 |
| 40.0 | | | | | 0.85 | 1.00 | | | 0.70 | 0.90 | | | | 0.70 | 0.80 | | 0.40 | 0.65 | 0.80 | | 40.0 |
| 42.0 | | | | | 0.65 | 0.75 | | | | 0.65 | | | | | | | | 0.40 | | | 42.0 |
| 44.0 | | | | | | | | | | | | | | | | | | | | | 44.0 |
| 46.0 | | | | | | | | | | | | | | | | | | | | | 46.0 |
| 48.0 | | | | | | | | | | | | | | | | | | | | | 48.0 |
| 50.0 | | | | | | | | | | | | | | | | | | | | | 50.0 |
| 52.0 | | | | | | | | | | | | | | | | | | | | | 52.0 |
| 54.0 | | | | | | | | | | | | | | | | | | | | | 54.0 |
| 55.0 | | | | | | | | | | | | | | | | | | | | | 55.0 |
| 56.0 | | | | | | | | | | | | | | | | | | | | | 56.0 |
| 1 | 0 | 0 | 0 | 0 | 0 | 0 | 0 | 0 | 46 | 46 | 46 | 46 | 92 | 92 | 92 | 92 | 100 | 100 | 100 | 100 | 1 |
| 2 | 0 | 0 | 0 | 0 | 92 | 92 | 92 | 92 | 92 | 92 | 92 | 92 | 92 | 92 | 92 | 92 | 100 | 100 | 100 | 100 | 2 |
| 3 | 0 | 0 | 0 | 0 | 92 | 92 | 92 | 92 | 92 | 92 | 92 | 92 | 92 | 92 | 92 | 92 | 100 | 100 | 100 | 100 | 3 |
| 4 | 0 | 0 | 0 | 0 | 92 | 92 | 92 | 92 | 92 | 92 | 92 | 92 | 92 | 92 | 92 | 92 | 100 | 100 | 100 | 100 | 4 |
| 5 | 0 | 0 | 0 | 0 | 92 | 92 | 92 | 92 | 92 | 92 | 92 | 92 | 92 | 92 | 92 | 92 | 100 | 100 | 100 | 100 | 5 |
| ID | 1 | 1 | 1 | 1 | 9 | 9 | 9 | 9 | 10 | 10 | 10 | 10 | 11 | 11 | 11 | 11 | 22 | 22 | 22 | 22 | ID |
| [DEG] | 0～84 | 40～84 | 57～84 | 71～84 | 33～84 | 38～84 | 56～84 | 69～84 | 43～84 | 45～84 | 57～84 | 68～84 | 50～84 | 52～84 | 54～84 | 68～84 | 51～84 | 52～84 | 57～84 | 70～84 | [DEG] |
| | 1 | 1 | 1 | 1 | 1 | 1 | 1 | 1 | 1 | 1 | 1 | 1 | 1 | 1 | 1 | 1 | 1 | 1 | 1 | 1 | |
| | 5t | 5t | 5t | 5t | 5t | 5t | 5t | 5t | 5t | 5t | 5t | 5t | 5t | 5t | 5t | 5t | 5t | 5t | 5t | 5t | |

| FAJ | 17.7m | 0.0 t | スマートチャート2 | JPN |
|---|---|---|---|---|

| m | 10.2 | 10.2 | 10.2 | 10.2 | 38.2 | 38.2 | 38.2 | 38.2 | 41.7 | 41.7 | 41.7 | 41.7 | 45.2 | 45.2 | 45.2 | 45.2 | 48.0 | 48.0 | 48.0 | 48.0 | m |
|---|---|---|---|---|---|---|---|---|---|---|---|---|---|---|---|---|---|---|---|---|---|
| ° | 5 | 25 | 45 | 60 | 5 | 25 | 45 | 60 | 5 | 25 | 45 | 60 | 5 | 25 | 45 | 60 | 5 | 25 | 45 | 60 | ° |
| 2.0 | | | | | | | | | | | | | | | | | | | | | 2.0 |
| 3.0 | 1.50 | | | | | | | | | | | | | | | | | | | | 3.0 |
| 4.0 | 1.50 | | | | | | | | | | | | | | | | | | | | 4.0 |
| 5.0 | 1.50 | | | | | | | | | | | | | | | | | | | | 5.0 |
| 6.0 | 1.50 | | | | | | | | | | | | | | | | | | | | 6.0 |
| 7.0 | 1.50 | | | | | | | | | | | | | | | | | | | | 7.0 |
| 8.0 | 1.50 | | | | 1.50 | | | | | | | | | | | | | | | | 8.0 |
| 9.0 | 1.50 | 1.25 | | | 1.50 | | | | 1.50 | | | | 1.45 | | | | | | | | 9.0 |
| 10.0 | 1.45 | 1.15 | | | 1.50 | | | | 1.50 | | | | 1.45 | | | | 1.35 | | | | 10.0 |
| 11.0 | 1.35 | 1.10 | | | 1.50 | | | | 1.45 | | | | 1.40 | | | | 1.35 | | | | 11.0 |
| 12.0 | 1.25 | 1.05 | | | 1.45 | | | | 1.45 | | | | 1.40 | | | | 1.35 | | | | 12.0 |
| 13.0 | 1.20 | 1.00 | | | 1.45 | | | | 1.40 | | | | 1.35 | | | | 1.30 | | | | 13.0 |
| 14.0 | 1.15 | 0.95 | 0.85 | | 1.40 | | | | 1.40 | | | | 1.35 | | | | 1.30 | | | | 14.0 |
| 16.0 | 1.00 | 0.90 | 0.80 | 0.55 | 1.35 | 1.00 | | | 1.30 | 1.00 | | | 1.30 | 1.00 | | | 1.25 | | | | 16.0 |
| 18.0 | 0.95 | 0.85 | 0.75 | 0.50 | 1.30 | 0.95 | | | 1.25 | 0.95 | | | 1.25 | 0.95 | | | 1.20 | 0.95 | | | 18.0 |
| 20.0 | 0.85 | 0.80 | 0.75 | 0.50 | 1.20 | 0.90 | 0.75 | | 1.20 | 0.90 | 0.75 | | 1.20 | 0.90 | | | 1.15 | 0.90 | | | 20.0 |
| 22.0 | 0.80 | 0.75 | 0.70 | | 1.15 | 0.90 | 0.75 | 0.50 | 1.15 | 0.90 | 0.75 | 0.50 | 1.15 | 0.90 | 0.75 | | 1.15 | 0.90 | 0.75 | | 22.0 |
| 24.0 | 0.75 | 0.75 | | | 1.10 | 0.85 | 0.70 | 0.45 | 1.10 | 0.85 | 0.70 | 0.45 | 1.10 | 0.85 | 0.70 | 0.45 | 1.10 | 0.85 | 0.70 | 0.45 | 24.0 |
| 26.0 | | | | | 1.05 | 0.85 | 0.70 | 0.45 | 1.05 | 0.85 | 0.70 | 0.45 | 1.05 | 0.85 | 0.70 | 0.45 | 1.05 | 0.85 | 0.70 | 0.45 | 26.0 |
| 28.0 | | | | | 1.00 | 0.80 | 0.70 | 0.45 | 1.00 | 0.80 | 0.70 | 0.45 | 1.05 | 0.80 | 0.70 | 0.45 | 1.00 | 0.80 | 0.70 | 0.45 | 28.0 |
| 30.0 | | | | | 0.95 | 0.80 | 0.70 | 0.45 | 0.95 | 0.80 | 0.70 | 0.45 | 1.00 | 0.80 | 0.70 | 0.45 | 1.00 | 0.80 | 0.70 | 0.45 | 30.0 |
| 32.0 | | | | | 0.90 | 0.75 | 0.70 | | 0.95 | 0.75 | 0.70 | 0.40 | 0.95 | 0.75 | 0.70 | 0.40 | 0.95 | 0.75 | 0.70 | 0.40 | 32.0 |
| 34.0 | | | | | 0.85 | 0.75 | 0.70 | | 0.90 | 0.75 | 0.70 | | 0.90 | 0.75 | 0.70 | 0.40 | 0.90 | 0.75 | 0.70 | 0.40 | 34.0 |
| 36.0 | | | | | 0.85 | 0.75 | 0.70 | | 0.85 | 0.75 | 0.70 | | 0.90 | 0.75 | 0.70 | | 0.90 | 0.75 | 0.65 | 0.40 | 36.0 |
| 38.0 | | | | | 0.80 | 0.70 | 0.70 | | 0.85 | 0.70 | 0.70 | | 0.85 | 0.70 | 0.65 | | 0.85 | 0.70 | 0.65 | | 38.0 |
| 40.0 | | | | | 0.80 | 0.70 | 0.70 | | 0.80 | 0.70 | 0.70 | | 0.75 | 0.70 | 0.65 | | 0.70 | 0.70 | 0.65 | | 40.0 |
| 42.0 | | | | | 0.75 | 0.70 | | | 0.75 | 0.70 | 0.70 | | 0.55 | 0.70 | 0.65 | | 0.50 | 0.70 | 0.65 | | 42.0 |
| 44.0 | | | | | 0.75 | 0.70 | | | 0.55 | 0.70 | | | | 0.60 | 0.65 | | | 0.55 | 0.65 | | 44.0 |
| 46.0 | | | | | 0.55 | 0.70 | | | 0.40 | 0.55 | | | | 0.40 | | | | | 0.50 | | 46.0 |
| 48.0 | | | | | | 0.50 | | | | | | | | | | | | | | | 48.0 |
| 50.0 | | | | | | | | | | | | | | | | | | | | | 50.0 |
| 52.0 | | | | | | | | | | | | | | | | | | | | | 52.0 |
| 54.0 | | | | | | | | | | | | | | | | | | | | | 54.0 |
| 55.0 | | | | | | | | | | | | | | | | | | | | | 55.0 |
| 56.0 | | | | | | | | | | | | | | | | | | | | | 56.0 |
| 1 | 0 | 0 | 0 | 0 | 0 | 0 | 0 | 0 | 46 | 46 | 46 | 46 | 92 | 92 | 92 | 92 | 100 | 100 | 100 | 100 | 1 |
| 2 | 0 | 0 | 0 | 0 | 92 | 92 | 92 | 92 | 92 | 92 | 92 | 92 | 92 | 92 | 92 | 92 | 100 | 100 | 100 | 100 | 2 |
| 3 | 0 | 0 | 0 | 0 | 92 | 92 | 92 | 92 | 92 | 92 | 92 | 92 | 92 | 92 | 92 | 92 | 100 | 100 | 100 | 100 | 3 |
| 4 | 0 | 0 | 0 | 0 | 92 | 92 | 92 | 92 | 92 | 92 | 92 | 92 | 92 | 92 | 92 | 92 | 100 | 100 | 100 | 100 | 4 |
| 5 | 0 | 0 | 0 | 0 | 92 | 92 | 92 | 92 | 92 | 92 | 92 | 92 | 92 | 92 | 92 | 92 | 100 | 100 | 100 | 100 | 5 |
| ID | 1 | 1 | 1 | 1 | 9 | 9 | 9 | 9 | 10 | 10 | 10 | 10 | 11 | 11 | 11 | 11 | 22 | 22 | 22 | 22 | ID |
| [DEG] | 19～84 | 31～84 | 51～84 | 65～84 | 35～84 | 37～84 | 54～84 | 71～84 | 41～84 | 47～84 | 55～84 | 70～84 | 51～84 | 52～84 | 57～84 | 69～84 | 53～84 | 56～84 | 57～84 | 68～84 | [DEG] |
| | 1 | 1 | 1 | 1 | 1 | 1 | 1 | 1 | 1 | 1 | 1 | 1 | 1 | 1 | 1 | 1 | 1 | 1 | 1 | 1 | |
| | 5t | 5t | 5t | 5t | 5t | 5t | 5t | 5t | 5t | 5t | 5t | 5t | 5t | 5t | 5t | 5t | 5t | 5t | 5t | 5t | |

| FAJ | 8.4m | 0.0 t | 7.8m | 360 ° | JPN |
|---|---|---|---|---|---|

| m | 10.2 | 10.2 | 10.2 | 10.2 | 38.2 | 38.2 | 38.2 | 38.2 | 41.7 | 41.7 | 41.7 | 41.7 | 45.2 | 45.2 | 45.2 | 45.2 | 48.0 | 48.0 | 48.0 | 48.0 | m |
|---|---|---|---|---|---|---|---|---|---|---|---|---|---|---|---|---|---|---|---|---|---|
| ° | 5 | 25 | 45 | 60 | 5 | 25 | 45 | 60 | 5 | 25 | 45 | 60 | 5 | 25 | 45 | 60 | 5 | 25 | 45 | 60 | ° |
| 2.0 | 4.00 | | | | | | | | | | | | | | | | | | | | 2.0 |
| 3.0 | 4.00 | | | | | | | | | | | | | | | | | | | | 3.0 |
| 4.0 | 4.00 | 4.00 | | | | | | | | | | | | | | | | | | | 4.0 |
| 5.0 | 4.00 | 4.00 | | | | | | | | | | | | | | | | | | | 5.0 |
| 6.0 | 4.00 | 4.00 | 3.00 | | | | | | | | | | | | | | | | | | 6.0 |
| 7.0 | 4.00 | 4.00 | 2.85 | | 4.00 | | | | 4.00 | | | | | | | | | | | | 7.0 |
| 8.0 | 4.00 | 4.00 | 2.70 | 1.60 | 4.00 | | | | 4.00 | | | | 4.00 | | | | 4.00 | | | | 8.0 |
| 9.0 | 4.00 | 4.00 | 2.55 | 1.55 | 4.00 | | | | 4.00 | | | | 4.00 | | | | 4.00 | | | | 9.0 |
| 10.0 | 4.00 | 3.90 | 2.45 | 1.50 | 4.00 | 4.00 | | | 4.00 | 4.00 | | | 4.00 | | | | 4.00 | | | | 10.0 |
| 11.0 | 4.00 | 3.70 | 2.35 | | 4.00 | 4.00 | | | 4.00 | 4.00 | | | 4.00 | 4.00 | | | 4.00 | | | | 11.0 |
| 12.0 | 4.00 | 3.50 | 2.30 | | 4.00 | 4.00 | 2.65 | 1.55 | 4.00 | 4.00 | 2.65 | | 4.00 | 3.95 | | | 4.00 | 3.70 | | | 12.0 |
| 13.0 | 4.00 | 3.35 | | | 4.00 | 4.00 | 2.60 | 1.50 | 4.00 | 3.90 | 2.60 | 1.50 | 4.00 | 3.80 | 2.60 | | 3.95 | 3.55 | | | 13.0 |
| 14.0 | 4.00 | 3.20 | | | 4.00 | 3.85 | 2.55 | 1.50 | 4.00 | 3.75 | 2.55 | 1.50 | 4.00 | 3.65 | 2.55 | 1.50 | 3.85 | 3.45 | 2.60 | 1.50 | 14.0 |
| 16.0 | | | | | 4.00 | 3.60 | 2.45 | 1.45 | 3.95 | 3.50 | 2.45 | 1.45 | 3.85 | 3.40 | 2.45 | 1.45 | 3.55 | 3.20 | 2.50 | 1.45 | 16.0 |
| 18.0 | | | | | 3.75 | 3.35 | 2.35 | 1.40 | 3.65 | 3.25 | 2.35 | 1.40 | 3.55 | 3.20 | 2.40 | 1.40 | 3.30 | 3.05 | 2.40 | 1.40 | 18.0 |
| 20.0 | | | | | 3.50 | 3.15 | 2.25 | 1.40 | 3.40 | 3.05 | 2.30 | 1.40 | 3.30 | 3.00 | 2.30 | 1.40 | 3.05 | 2.85 | 2.30 | 1.40 | 20.0 |
| 22.0 | | | | | 3.25 | 2.95 | 2.20 | 1.35 | 3.20 | 2.90 | 2.20 | 1.35 | 3.10 | 2.80 | 2.25 | 1.35 | 2.70 | 2.60 | 2.25 | 1.35 | 22.0 |
| 24.0 | | | | | 3.05 | 2.80 | 2.15 | | 2.90 | 2.75 | 2.15 | 1.35 | 2.65 | 2.65 | 2.15 | 1.35 | 2.35 | 2.25 | 2.20 | 1.35 | 24.0 |
| 26.0 | | | | | 2.50 | 2.65 | 2.10 | | 2.35 | 2.60 | 2.10 | | 2.10 | 2.40 | 2.10 | | 2.00 | 1.95 | 1.95 | 1.30 | 26.0 |
| 28.0 | | | | | 2.00 | 2.20 | 2.05 | | 1.85 | 2.10 | 2.05 | | 1.60 | 1.90 | 2.05 | | 1.55 | 1.70 | 1.75 | | 28.0 |
| 30.0 | | | | | 1.60 | 1.80 | 1.85 | | 1.45 | 1.65 | 1.80 | | 1.20 | 1.45 | 1.60 | | 1.10 | 1.40 | 1.50 | | 30.0 |
| 32.0 | | | | | 1.20 | 1.40 | | | 1.05 | 1.25 | 1.35 | | 0.80 | 1.05 | 1.15 | | 0.75 | 1.00 | 1.15 | | 32.0 |
| 34.0 | | | | | 0.90 | 1.00 | | | 0.75 | 0.90 | | | | 0.70 | 0.80 | | | 0.65 | 0.80 | | 34.0 |
| 36.0 | | | | | 0.60 | 0.70 | | | 0.45 | 0.60 | | | | | | | | | | | 36.0 |
| 38.0 | | | | | | 0.45 | | | | | | | | | | | | | | | 38.0 |
| 40.0 | | | | | | | | | | | | | | | | | | | | | 40.0 |
| 42.0 | | | | | | | | | | | | | | | | | | | | | 42.0 |
| 44.0 | | | | | | | | | | | | | | | | | | | | | 44.0 |
| 46.0 | | | | | | | | | | | | | | | | | | | | | 46.0 |
| 48.0 | | | | | | | | | | | | | | | | | | | | | 48.0 |
| 50.0 | | | | | | | | | | | | | | | | | | | | | 50.0 |
| 52.0 | | | | | | | | | | | | | | | | | | | | | 52.0 |
| 54.0 | | | | | | | | | | | | | | | | | | | | | 54.0 |
| 55.0 | | | | | | | | | | | | | | | | | | | | | 55.0 |
| 56.0 | | | | | | | | | | | | | | | | | | | | | 56.0 |
| 1 | 0 | 0 | 0 | 0 | 0 | 0 | 0 | 0 | 46 | 46 | 46 | 46 | 92 | 92 | 92 | 92 | 100 | 100 | 100 | 100 | 1 |
| 2 | 0 | 0 | 0 | 0 | 92 | 92 | 92 | 92 | 92 | 92 | 92 | 92 | 92 | 92 | 92 | 92 | 100 | 100 | 100 | 100 | 2 |
| 3 | 0 | 0 | 0 | 0 | 92 | 92 | 92 | 92 | 92 | 92 | 92 | 92 | 92 | 92 | 92 | 92 | 100 | 100 | 100 | 100 | 3 |
| 4 | 0 | 0 | 0 | 0 | 92 | 92 | 92 | 92 | 92 | 92 | 92 | 92 | 92 | 92 | 92 | 92 | 100 | 100 | 100 | 100 | 4 |
| 5 | 0 | 0 | 0 | 0 | 92 | 92 | 92 | 92 | 92 | 92 | 92 | 92 | 92 | 92 | 92 | 92 | 100 | 100 | 100 | 100 | 5 |
| ID | 1 | 1 | 1 | 1 | 9 | 9 | 9 | 9 | 10 | 10 | 10 | 10 | 11 | 11 | 11 | 11 | 22 | 22 | 22 | 22 | ID |
| [DEG] | 28～84 | 35～84 | 54～84 | 68～84 | 37～84 | 35～84 | 54～84 | 68～84 | 42～84 | 46～84 | 54～84 | 67～84 | 53～84 | 54～84 | 55～84 | 69～84 | 56～84 | 56～84 | 58～84 | 68～84 | [DEG] |
| | 1 | 1 | 1 | 1 | 1 | 1 | 1 | 1 | 1 | 1 | 1 | 1 | 1 | 1 | 1 | 1 | 1 | 1 | 1 | 1 | |
| | 5t | 5t | 5t | 5t | 5t | 5t | 5t | 5t | 5t | 5t | 5t | 5t | 5t | 5t | 5t | 5t | 5t | 5t | 5t | 5t | |

| FAJ | 13.1m | 0.0 t | 7.8m | 360 ° | JPN |
|---|---|---|---|---|---|

| m | 10.2 | 10.2 | 10.2 | 10.2 | 38.2 | 38.2 | 38.2 | 38.2 | 41.7 | 41.7 | 41.7 | 41.7 | 45.2 | 45.2 | 45.2 | 45.2 | 48.0 | 48.0 | 48.0 | 48.0 | m |
|---|---|---|---|---|---|---|---|---|---|---|---|---|---|---|---|---|---|---|---|---|---|
| ° | 5 | 25 | 45 | 60 | 5 | 25 | 45 | 60 | 5 | 25 | 45 | 60 | 5 | 25 | 45 | 60 | 5 | 25 | 45 | 60 | ° |
| 2.0 | 2.80 | | | | | | | | | | | | | | | | | | | | 2.0 |
| 3.0 | 2.80 | | | | | | | | | | | | | | | | | | | | 3.0 |
| 4.0 | 2.80 | | | | | | | | | | | | | | | | | | | | 4.0 |
| 5.0 | 2.80 | | | | | | | | | | | | | | | | | | | | 5.0 |
| 6.0 | 2.80 | | | | | | | | | | | | | | | | | | | | 6.0 |
| 7.0 | 2.80 | 2.60 | | | | | | | | | | | | | | | | | | | 7.0 |
| 8.0 | 2.80 | 2.45 | | | 2.80 | | | | 2.80 | | | | | | | | | | | | 8.0 |
| 9.0 | 2.80 | 2.30 | | | 2.80 | | | | 2.80 | | | | 2.80 | | | | | | | | 9.0 |
| 10.0 | 2.65 | 2.20 | 1.75 | | 2.80 | | | | 2.80 | | | | 2.80 | | | | 2.65 | | | | 10.0 |
| 11.0 | 2.50 | 2.10 | 1.65 | | 2.80 | | | | 2.80 | | | | 2.80 | | | | 2.65 | | | | 11.0 |
| 12.0 | 2.35 | 2.00 | 1.55 | 0.90 | 2.80 | | | | 2.80 | | | | 2.75 | | | | 2.60 | | | | 12.0 |
| 13.0 | 2.25 | 1.95 | 1.50 | 0.85 | 2.80 | 2.20 | | | 2.80 | 2.20 | | | 2.70 | | | | 2.55 | | | | 13.0 |
| 14.0 | 2.10 | 1.85 | 1.45 | 0.85 | 2.80 | 2.15 | | | 2.75 | 2.15 | | | 2.65 | 2.15 | | | 2.55 | | | | 14.0 |
| 16.0 | 1.95 | 1.75 | 1.35 | | 2.70 | 2.05 | 1.55 | | 2.65 | 2.05 | 1.55 | | 2.60 | 2.05 | | | 2.45 | 2.05 | | | 16.0 |
| 18.0 | 1.80 | 1.65 | | | 2.55 | 2.00 | 1.50 | 0.80 | 2.55 | 2.00 | 1.50 | 0.80 | 2.50 | 2.00 | 1.50 | 0.80 | 2.40 | 1.95 | 1.50 | | 18.0 |
| 20.0 | 1.70 | | | | 2.45 | 1.90 | 1.40 | 0.80 | 2.45 | 1.90 | 1.45 | 0.80 | 2.45 | 1.90 | 1.45 | 0.80 | 2.35 | 1.90 | 1.45 | 0.80 | 20.0 |
| 22.0 | | | | | 2.30 | 1.85 | 1.35 | 0.75 | 2.35 | 1.85 | 1.35 | 0.75 | 2.35 | 1.85 | 1.40 | 0.75 | 2.30 | 1.85 | 1.40 | 0.75 | 22.0 |
| 24.0 | | | | | 2.20 | 1.80 | 1.30 | 0.75 | 2.25 | 1.80 | 1.35 | 0.75 | 2.25 | 1.80 | 1.35 | 0.75 | 2.25 | 1.80 | 1.35 | 0.75 | 24.0 |
| 26.0 | | | | | 2.10 | 1.75 | 1.25 | 0.75 | 2.15 | 1.75 | 1.30 | 0.75 | 2.15 | 1.75 | 1.30 | 0.75 | 2.00 | 1.75 | 1.30 | 0.75 | 26.0 |
| 28.0 | | | | | 2.00 | 1.70 | 1.25 | | 2.05 | 1.70 | 1.25 | 0.75 | 2.00 | 1.75 | 1.25 | 0.70 | 1.75 | 1.75 | 1.25 | 0.70 | 28.0 |
| 30.0 | | | | | 1.95 | 1.70 | 1.20 | | 1.80 | 1.70 | 1.20 | | 1.55 | 1.70 | 1.20 | 0.70 | 1.50 | 1.55 | 1.20 | 0.70 | 30.0 |
| 32.0 | | | | | 1.60 | 1.65 | 1.20 | | 1.45 | 1.65 | 1.20 | | 1.20 | 1.55 | 1.20 | | 1.10 | 1.35 | 1.20 | | 32.0 |
| 34.0 | | | | | 1.25 | 1.50 | 1.15 | | 1.10 | 1.40 | 1.15 | | 0.85 | 1.20 | 1.15 | | 0.80 | 1.15 | 1.15 | | 34.0 |
| 36.0 | | | | | 0.95 | 1.20 | | | 0.80 | 1.05 | 1.15 | | 0.55 | 0.85 | 1.05 | | | 0.80 | 1.00 | | 36.0 |
| 38.0 | | | | | 0.70 | 0.90 | | | 0.55 | 0.75 | | | | 0.55 | 0.70 | | | | 0.70 | | 38.0 |
| 40.0 | | | | | 0.50 | 0.65 | | | | 0.50 | | | | | | | | | | | 40.0 |
| 42.0 | | | | | | | | | | | | | | | | | | | | | 42.0 |
| 44.0 | | | | | | | | | | | | | | | | | | | | | 44.0 |
| 46.0 | | | | | | | | | | | | | | | | | | | | | 46.0 |
| 48.0 | | | | | | | | | | | | | | | | | | | | | 48.0 |
| 50.0 | | | | | | | | | | | | | | | | | | | | | 50.0 |
| 52.0 | | | | | | | | | | | | | | | | | | | | | 52.0 |
| 54.0 | | | | | | | | | | | | | | | | | | | | | 54.0 |
| 55.0 | | | | | | | | | | | | | | | | | | | | | 55.0 |
| 56.0 | | | | | | | | | | | | | | | | | | | | | 56.0 |
| 1 | 0 | 0 | 0 | 0 | 0 | 0 | 0 | 0 | 46 | 46 | 46 | 46 | 92 | 92 | 92 | 92 | 100 | 100 | 100 | 100 | 1 |
| 2 | 0 | 0 | 0 | 0 | 92 | 92 | 92 | 92 | 92 | 92 | 92 | 92 | 92 | 92 | 92 | 92 | 100 | 100 | 100 | 100 | 2 |
| 3 | 0 | 0 | 0 | 0 | 92 | 92 | 92 | 92 | 92 | 92 | 92 | 92 | 92 | 92 | 92 | 92 | 100 | 100 | 100 | 100 | 3 |
| 4 | 0 | 0 | 0 | 0 | 92 | 92 | 92 | 92 | 92 | 92 | 92 | 92 | 92 | 92 | 92 | 92 | 100 | 100 | 100 | 100 | 4 |
| 5 | 0 | 0 | 0 | 0 | 92 | 92 | 92 | 92 | 92 | 92 | 92 | 92 | 92 | 92 | 92 | 92 | 100 | 100 | 100 | 100 | 5 |
| ID | 1 | 1 | 1 | 1 | 9 | 9 | 9 | 9 | 10 | 10 | 10 | 10 | 11 | 11 | 11 | 11 | 22 | 22 | 22 | 22 | ID |
| [DEG] | 0～84 | 40～84 | 57～84 | 71～84 | 38～84 | 43～84 | 56～84 | 69～84 | 46～84 | 48～84 | 57～84 | 68～84 | 53～84 | 55～84 | 57～84 | 68～84 | 58～84 | 59～84 | 60～84 | 70～84 | [DEG] |
| | 1 | 1 | 1 | 1 | 1 | 1 | 1 | 1 | 1 | 1 | 1 | 1 | 1 | 1 | 1 | 1 | 1 | 1 | 1 | 1 | |
| | 5t | 5t | 5t | 5t | 5t | 5t | 5t | 5t | 5t | 5t | 5t | 5t | 5t | 5t | 5t | 5t | 5t | 5t | 5t | 5t | |

# フルオートジブ

| FAJ | 17.7m | 0.0 t | 7.8m | 360 ° | JPN |
|---|---|---|---|---|---|

| m | 10.2 | 10.2 | 10.2 | 10.2 | 38.2 | 38.2 | 38.2 | 38.2 | 41.7 | 41.7 | 41.7 | 41.7 | 45.2 | 45.2 | 45.2 | 45.2 | 48.0 | 48.0 | 48.0 | 48.0 | m |
|---|---|---|---|---|---|---|---|---|---|---|---|---|---|---|---|---|---|---|---|---|---|
| ° | 5 | 25 | 45 | 60 | 5 | 25 | 45 | 60 | 5 | 25 | 45 | 60 | 5 | 25 | 45 | 60 | 5 | 25 | 45 | 60 | ° |
| 2.0 | | | | | | | | | | | | | | | | | | | | | 2.0 |
| 3.0 | 1.50 | | | | | | | | | | | | | | | | | | | | 3.0 |
| 4.0 | 1.50 | | | | | | | | | | | | | | | | | | | | 4.0 |
| 5.0 | 1.50 | | | | | | | | | | | | | | | | | | | | 5.0 |
| 6.0 | 1.50 | | | | | | | | | | | | | | | | | | | | 6.0 |
| 7.0 | 1.50 | | | | | | | | | | | | | | | | | | | | 7.0 |
| 8.0 | 1.50 | | | | 1.50 | | | | | | | | | | | | | | | | 8.0 |
| 9.0 | 1.50 | 1.25 | | | 1.50 | | | | 1.50 | | | | 1.45 | | | | | | | | 9.0 |
| 10.0 | 1.45 | 1.15 | | | 1.50 | | | | 1.50 | | | | 1.45 | | | | 1.35 | | | | 10.0 |
| 11.0 | 1.35 | 1.10 | | | 1.50 | | | | 1.45 | | | | 1.40 | | | | 1.35 | | | | 11.0 |
| 12.0 | 1.25 | 1.05 | | | 1.45 | | | | 1.45 | | | | 1.40 | | | | 1.35 | | | | 12.0 |
| 13.0 | 1.20 | 1.00 | | | 1.45 | | | | 1.40 | | | | 1.35 | | | | 1.30 | | | | 13.0 |
| 14.0 | 1.15 | 0.95 | 0.85 | | 1.40 | | | | 1.40 | | | | 1.35 | | | | 1.30 | | | | 14.0 |
| 16.0 | 1.00 | 0.90 | 0.80 | 0.55 | 1.35 | 1.00 | | | 1.30 | 1.00 | | | 1.30 | 1.00 | | | 1.25 | | | | 16.0 |
| 18.0 | 0.95 | 0.85 | 0.75 | 0.50 | 1.30 | 0.95 | | | 1.25 | 0.95 | | | 1.25 | 0.95 | | | 1.20 | 0.95 | | | 18.0 |
| 20.0 | 0.85 | 0.80 | 0.75 | 0.50 | 1.20 | 0.90 | 0.75 | | 1.20 | 0.90 | 0.75 | | 1.20 | 0.90 | | | 1.15 | 0.90 | | | 20.0 |
| 22.0 | 0.80 | 0.75 | 0.70 | | 1.15 | 0.90 | 0.75 | 0.50 | 1.15 | 0.90 | 0.75 | 0.50 | 1.15 | 0.90 | 0.75 | | 1.15 | 0.90 | 0.75 | | 22.0 |
| 24.0 | 0.75 | 0.75 | | | 1.10 | 0.85 | 0.70 | 0.45 | 1.10 | 0.85 | 0.70 | 0.45 | 1.10 | 0.85 | 0.70 | 0.45 | 1.10 | 0.85 | 0.70 | 0.45 | 24.0 |
| 26.0 | | | | | 1.05 | 0.85 | 0.70 | 0.45 | 1.05 | 0.85 | 0.70 | 0.45 | 1.05 | 0.85 | 0.70 | 0.45 | 1.05 | 0.85 | 0.70 | 0.45 | 26.0 |
| 28.0 | | | | | 1.00 | 0.80 | 0.70 | 0.45 | 1.00 | 0.80 | 0.70 | 0.45 | 1.05 | 0.80 | 0.70 | 0.45 | 1.00 | 0.80 | 0.70 | 0.45 | 28.0 |
| 30.0 | | | | | 0.95 | 0.80 | 0.70 | 0.45 | 0.95 | 0.80 | 0.70 | 0.45 | 1.00 | 0.80 | 0.70 | 0.45 | 1.00 | 0.80 | 0.70 | 0.45 | 30.0 |
| 32.0 | | | | | 0.90 | 0.75 | 0.70 | | 0.95 | 0.75 | 0.70 | 0.40 | 0.95 | 0.75 | 0.70 | 0.40 | 0.95 | 0.75 | 0.70 | 0.40 | 32.0 |
| 34.0 | | | | | 0.85 | 0.75 | 0.70 | | 0.90 | 0.75 | 0.70 | | 0.90 | 0.75 | 0.70 | 0.40 | 0.90 | 0.75 | 0.70 | 0.40 | 34.0 |
| 36.0 | | | | | 0.85 | 0.75 | 0.70 | | 0.85 | 0.75 | 0.70 | | 0.90 | 0.75 | 0.70 | | 0.80 | 0.75 | 0.65 | 0.40 | 36.0 |
| 38.0 | | | | | 0.80 | 0.70 | 0.70 | | 0.85 | 0.70 | 0.70 | | 0.65 | 0.70 | 0.65 | | 0.55 | 0.70 | 0.65 | | 38.0 |
| 40.0 | | | | | 0.80 | 0.70 | 0.70 | | 0.65 | 0.70 | 0.70 | | | 0.70 | 0.65 | | | 0.70 | 0.65 | | 40.0 |
| 42.0 | | | | | 0.60 | 0.70 | | | 0.40 | 0.65 | 0.70 | | | 0.50 | 0.65 | | | | 0.65 | | 42.0 |
| 44.0 | | | | | 0.40 | 0.55 | | | | 0.45 | | | | | | | | | | | 44.0 |
| 46.0 | | | | | | | | | | | | | | | | | | | | | 46.0 |
| 48.0 | | | | | | | | | | | | | | | | | | | | | 48.0 |
| 50.0 | | | | | | | | | | | | | | | | | | | | | 50.0 |
| 52.0 | | | | | | | | | | | | | | | | | | | | | 52.0 |
| 54.0 | | | | | | | | | | | | | | | | | | | | | 54.0 |
| 55.0 | | | | | | | | | | | | | | | | | | | | | 55.0 |
| 56.0 | | | | | | | | | | | | | | | | | | | | | 56.0 |
| 1 | 0 | 0 | 0 | 0 | 0 | 0 | 0 | 0 | 46 | 46 | 46 | 46 | 92 | 92 | 92 | 92 | 100 | 100 | 100 | 100 | 1 |
| 2 | 0 | 0 | 0 | 0 | 92 | 92 | 92 | 92 | 92 | 92 | 92 | 92 | 92 | 92 | 92 | 92 | 100 | 100 | 100 | 100 | 2 |
| 3 | 0 | 0 | 0 | 0 | 92 | 92 | 92 | 92 | 92 | 92 | 92 | 92 | 92 | 92 | 92 | 92 | 100 | 100 | 100 | 100 | 3 |
| 4 | 0 | 0 | 0 | 0 | 92 | 92 | 92 | 92 | 92 | 92 | 92 | 92 | 92 | 92 | 92 | 92 | 100 | 100 | 100 | 100 | 4 |
| 5 | 0 | 0 | 0 | 0 | 92 | 92 | 92 | 92 | 92 | 92 | 92 | 92 | 92 | 92 | 92 | 92 | 100 | 100 | 100 | 100 | 5 |
| ID | 1 | 1 | 1 | 1 | 9 | 9 | 9 | 9 | 10 | 10 | 10 | 10 | 11 | 11 | 11 | 11 | 22 | 22 | 22 | 22 | ID |
| [DEG] | 19～84 | 31～84 | 51～84 | 65～84 | 39～84 | 45～84 | 54～84 | 71～84 | 47～84 | 50～84 | 55～84 | 70～84 | 56～84 | 57～84 | 59～84 | 69～84 | 57～84 | 61～84 | 62～84 | 68～84 | [DEG] |
| | 1 | 1 | 1 | 1 | 1 | 1 | 1 | 1 | 1 | 1 | 1 | 1 | 1 | 1 | 1 | 1 | 1 | 1 | 1 | 1 | |
| | 5t | 5t | 5t | 5t | 5t | 5t | 5t | 5t | 5t | 5t | 5t | 5t | 5t | 5t | 5t | 5t | 5t | 5t | 5t | 5t | |

| FAJ | 8.4m | 0.0 t | 7.6m | 360 ° | JPN |
|---|---|---|---|---|---|

| m | 10.2 | 10.2 | 10.2 | 10.2 | 38.2 | 38.2 | 38.2 | 38.2 | 41.7 | 41.7 | 41.7 | 41.7 | 45.2 | 45.2 | 45.2 | 45.2 | 48.0 | 48.0 | 48.0 | 48.0 | m |
|---|---|---|---|---|---|---|---|---|---|---|---|---|---|---|---|---|---|---|---|---|---|
| ° | 5 | 25 | 45 | 60 | 5 | 25 | 45 | 60 | 5 | 25 | 45 | 60 | 5 | 25 | 45 | 60 | 5 | 25 | 45 | 60 | ° |
| 2.0 | 4.00 | | | | | | | | | | | | | | | | | | | | 2.0 |
| 3.0 | 4.00 | | | | | | | | | | | | | | | | | | | | 3.0 |
| 4.0 | 4.00 | 4.00 | | | | | | | | | | | | | | | | | | | 4.0 |
| 5.0 | 4.00 | 4.00 | | | | | | | | | | | | | | | | | | | 5.0 |
| 6.0 | 4.00 | 4.00 | 3.00 | | | | | | | | | | | | | | | | | | 6.0 |
| 7.0 | 4.00 | 4.00 | 2.85 | | 4.00 | | | | 4.00 | | | | | | | | | | | | 7.0 |
| 8.0 | 4.00 | 4.00 | 2.70 | 1.60 | 4.00 | | | | 4.00 | | | | 4.00 | | | | 4.00 | | | | 8.0 |
| 9.0 | 4.00 | 4.00 | 2.55 | 1.55 | 4.00 | | | | 4.00 | | | | 4.00 | | | | 4.00 | | | | 9.0 |
| 10.0 | 4.00 | 3.90 | 2.45 | 1.50 | 4.00 | 4.00 | | | 4.00 | 4.00 | | | 4.00 | | | | 4.00 | | | | 10.0 |
| 11.0 | 4.00 | 3.70 | 2.35 | | 4.00 | 4.00 | | | 4.00 | 4.00 | | | 4.00 | 4.00 | | | 4.00 | | | | 11.0 |
| 12.0 | 4.00 | 3.50 | 2.30 | | 4.00 | 4.00 | 2.65 | 1.55 | 4.00 | 4.00 | 2.65 | | 4.00 | 3.95 | | | 4.00 | 3.70 | | | 12.0 |
| 13.0 | 4.00 | 3.35 | | | 4.00 | 4.00 | 2.60 | 1.50 | 4.00 | 3.90 | 2.60 | 1.50 | 4.00 | 3.80 | 2.60 | | 3.95 | 3.55 | | | 13.0 |
| 14.0 | 4.00 | 3.20 | | | 4.00 | 3.85 | 2.55 | 1.50 | 4.00 | 3.75 | 2.55 | 1.50 | 4.00 | 3.65 | 2.55 | 1.50 | 3.85 | 3.45 | 2.60 | 1.50 | 14.0 |
| 16.0 | | | | | 4.00 | 3.60 | 2.45 | 1.45 | 3.95 | 3.50 | 2.45 | 1.45 | 3.85 | 3.40 | 2.45 | 1.45 | 3.55 | 3.20 | 2.50 | 1.45 | 16.0 |
| 18.0 | | | | | 3.75 | 3.35 | 2.35 | 1.40 | 3.65 | 3.25 | 2.35 | 1.40 | 3.55 | 3.20 | 2.40 | 1.40 | 3.30 | 3.05 | 2.40 | 1.40 | 18.0 |
| 20.0 | | | | | 3.50 | 3.15 | 2.25 | 1.40 | 3.40 | 3.05 | 2.30 | 1.40 | 3.30 | 3.00 | 2.30 | 1.40 | 3.05 | 2.85 | 2.30 | 1.40 | 20.0 |
| 22.0 | | | | | 3.25 | 2.95 | 2.20 | 1.35 | 3.20 | 2.90 | 2.20 | 1.35 | 3.10 | 2.80 | 2.25 | 1.35 | 2.70 | 2.60 | 2.25 | 1.35 | 22.0 |
| 24.0 | | | | | 2.90 | 2.80 | 2.15 | | 2.75 | 2.75 | 2.15 | 1.35 | 2.50 | 2.65 | 2.15 | 1.35 | 2.35 | 2.25 | 2.20 | 1.35 | 24.0 |
| 26.0 | | | | | 2.35 | 2.60 | 2.10 | | 2.20 | 2.45 | 2.10 | | 1.95 | 2.25 | 2.10 | | 1.85 | 1.95 | 1.95 | 1.30 | 26.0 |
| 28.0 | | | | | 1.85 | 2.10 | 2.05 | | 1.70 | 1.95 | 2.05 | | 1.45 | 1.75 | 1.95 | | 1.40 | 1.70 | 1.75 | | 28.0 |
| 30.0 | | | | | 1.45 | 1.65 | 1.75 | | 1.30 | 1.50 | 1.65 | | 1.05 | 1.30 | 1.45 | | 1.00 | 1.25 | 1.40 | | 30.0 |
| 32.0 | | | | | 1.10 | 1.25 | | | 0.95 | 1.15 | 1.25 | | 0.70 | 0.90 | 1.05 | | | 0.85 | 1.00 | | 32.0 |
| 34.0 | | | | | 0.80 | 0.90 | | | 0.60 | 0.80 | | | | 0.55 | 0.70 | | | | 0.65 | | 34.0 |
| 36.0 | | | | | 0.50 | 0.60 | | | | 0.50 | | | | | | | | | | | 36.0 |
| 38.0 | | | | | | | | | | | | | | | | | | | | | 38.0 |
| 40.0 | | | | | | | | | | | | | | | | | | | | | 40.0 |
| 42.0 | | | | | | | | | | | | | | | | | | | | | 42.0 |
| 44.0 | | | | | | | | | | | | | | | | | | | | | 44.0 |
| 46.0 | | | | | | | | | | | | | | | | | | | | | 46.0 |
| 48.0 | | | | | | | | | | | | | | | | | | | | | 48.0 |
| 50.0 | | | | | | | | | | | | | | | | | | | | | 50.0 |
| 52.0 | | | | | | | | | | | | | | | | | | | | | 52.0 |
| 54.0 | | | | | | | | | | | | | | | | | | | | | 54.0 |
| 55.0 | | | | | | | | | | | | | | | | | | | | | 55.0 |
| 56.0 | | | | | | | | | | | | | | | | | | | | | 56.0 |
| 1 | 0 | 0 | 0 | 0 | 0 | 0 | 0 | 0 | 46 | 46 | 46 | 46 | 92 | 92 | 92 | 92 | 100 | 100 | 100 | 100 | 1 |
| 2 | 0 | 0 | 0 | 0 | 92 | 92 | 92 | 92 | 92 | 92 | 92 | 92 | 92 | 92 | 92 | 92 | 100 | 100 | 100 | 100 | 2 |
| 3 | 0 | 0 | 0 | 0 | 92 | 92 | 92 | 92 | 92 | 92 | 92 | 92 | 92 | 92 | 92 | 92 | 100 | 100 | 100 | 100 | 3 |
| 4 | 0 | 0 | 0 | 0 | 92 | 92 | 92 | 92 | 92 | 92 | 92 | 92 | 92 | 92 | 92 | 92 | 100 | 100 | 100 | 100 | 4 |
| 5 | 0 | 0 | 0 | 0 | 92 | 92 | 92 | 92 | 92 | 92 | 92 | 92 | 92 | 92 | 92 | 92 | 100 | 100 | 100 | 100 | 5 |
| ID | 1 | 1 | 1 | 1 | 9 | 9 | 9 | 9 | 10 | 10 | 10 | 10 | 11 | 11 | 11 | 11 | 22 | 22 | 22 | 22 | ID |
| [DEG] | 28～84 | 35～84 | 54～84 | 68～84 | 37～84 | 40～84 | 54～84 | 68～84 | 46～84 | 46～84 | 54～84 | 67～84 | 53～84 | 54～84 | 55～84 | 69～84 | 58～84 | 59～84 | 58～84 | 68～84 | [DEG] |
| | 1 | 1 | 1 | 1 | 1 | 1 | 1 | 1 | 1 | 1 | 1 | 1 | 1 | 1 | 1 | 1 | 1 | 1 | 1 | 1 | |
| | 5t | 5t | 5t | 5t | 5t | 5t | 5t | 5t | 5t | 5t | 5t | 5t | 5t | 5t | 5t | 5t | 5t | 5t | 5t | 5t | |

| FAJ | 13.1m | 0.0 t | 7.6m | 360 ° | JPN |
|---|---|---|---|---|---|

| m | 10.2 | 10.2 | 10.2 | 10.2 | 38.2 | 38.2 | 38.2 | 38.2 | 41.7 | 41.7 | 41.7 | 41.7 | 45.2 | 45.2 | 45.2 | 45.2 | 48.0 | 48.0 | 48.0 | 48.0 | m |
|---|---|---|---|---|---|---|---|---|---|---|---|---|---|---|---|---|---|---|---|---|---|
| ° | 5 | 25 | 45 | 60 | 5 | 25 | 45 | 60 | 5 | 25 | 45 | 60 | 5 | 25 | 45 | 60 | 5 | 25 | 45 | 60 | ° |
| 2.0 | 2.80 | | | | | | | | | | | | | | | | | | | | 2.0 |
| 3.0 | 2.80 | | | | | | | | | | | | | | | | | | | | 3.0 |
| 4.0 | 2.80 | | | | | | | | | | | | | | | | | | | | 4.0 |
| 5.0 | 2.80 | | | | | | | | | | | | | | | | | | | | 5.0 |
| 6.0 | 2.80 | | | | | | | | | | | | | | | | | | | | 6.0 |
| 7.0 | 2.80 | 2.60 | | | | | | | | | | | | | | | | | | | 7.0 |
| 8.0 | 2.80 | 2.45 | | | 2.80 | | | | 2.80 | | | | | | | | | | | | 8.0 |
| 9.0 | 2.80 | 2.30 | | | 2.80 | | | | 2.80 | | | | 2.80 | | | | | | | | 9.0 |
| 10.0 | 2.65 | 2.20 | 1.75 | | 2.80 | | | | 2.80 | | | | 2.80 | | | | 2.65 | | | | 10.0 |
| 11.0 | 2.50 | 2.10 | 1.65 | | 2.80 | | | | 2.80 | | | | 2.80 | | | | 2.65 | | | | 11.0 |
| 12.0 | 2.35 | 2.00 | 1.55 | 0.90 | 2.80 | | | | 2.80 | | | | 2.75 | | | | 2.60 | | | | 12.0 |
| 13.0 | 2.25 | 1.95 | 1.50 | 0.85 | 2.80 | 2.20 | | | 2.80 | 2.20 | | | 2.70 | | | | 2.55 | | | | 13.0 |
| 14.0 | 2.10 | 1.85 | 1.45 | 0.85 | 2.80 | 2.15 | | | 2.75 | 2.15 | | | 2.65 | 2.15 | | | 2.55 | | | | 14.0 |
| 16.0 | 1.95 | 1.75 | 1.35 | | 2.70 | 2.05 | 1.55 | | 2.65 | 2.05 | 1.55 | | 2.60 | 2.05 | | | 2.45 | 2.05 | | | 16.0 |
| 18.0 | 1.80 | 1.65 | | | 2.55 | 2.00 | 1.50 | 0.80 | 2.55 | 2.00 | 1.50 | 0.80 | 2.50 | 2.00 | 1.50 | 0.80 | 2.40 | 1.95 | 1.50 | | 18.0 |
| 20.0 | 1.70 | | | | 2.45 | 1.90 | 1.40 | 0.80 | 2.45 | 1.90 | 1.45 | 0.80 | 2.45 | 1.90 | 1.45 | 0.80 | 2.35 | 1.90 | 1.45 | 0.80 | 20.0 |
| 22.0 | | | | | 2.30 | 1.85 | 1.35 | 0.75 | 2.35 | 1.85 | 1.35 | 0.75 | 2.35 | 1.85 | 1.40 | 0.75 | 2.30 | 1.85 | 1.40 | 0.75 | 22.0 |
| 24.0 | | | | | 2.20 | 1.80 | 1.30 | 0.75 | 2.25 | 1.80 | 1.35 | 0.75 | 2.25 | 1.80 | 1.35 | 0.75 | 2.25 | 1.80 | 1.35 | 0.75 | 24.0 |
| 26.0 | | | | | 2.10 | 1.75 | 1.25 | 0.75 | 2.15 | 1.75 | 1.30 | 0.75 | 2.15 | 1.75 | 1.30 | 0.75 | 2.00 | 1.75 | 1.30 | 0.75 | 26.0 |
| 28.0 | | | | | 2.00 | 1.70 | 1.25 | | 2.05 | 1.70 | 1.25 | 0.75 | 1.85 | 1.75 | 1.25 | 0.70 | 1.75 | 1.75 | 1.25 | 0.70 | 28.0 |
| 30.0 | | | | | 1.80 | 1.70 | 1.20 | | 1.65 | 1.70 | 1.20 | | 1.40 | 1.70 | 1.20 | 0.70 | 1.35 | 1.55 | 1.20 | 0.70 | 30.0 |
| 32.0 | | | | | 1.45 | 1.65 | 1.20 | | 1.30 | 1.60 | 1.20 | | 1.05 | 1.45 | 1.20 | | 1.00 | 1.35 | 1.20 | | 32.0 |
| 34.0 | | | | | 1.15 | 1.40 | 1.15 | | 1.00 | 1.25 | 1.15 | | 0.75 | 1.05 | 1.15 | | 0.70 | 1.00 | 1.15 | | 34.0 |
| 36.0 | | | | | 0.85 | 1.10 | | | 0.70 | 0.95 | 1.10 | | | 0.75 | 0.95 | | | 0.70 | 0.90 | | 36.0 |
| 38.0 | | | | | 0.60 | 0.80 | | | | 0.65 | | | | | 0.60 | | | | 0.60 | | 38.0 |
| 40.0 | | | | | | 0.55 | | | | | | | | | | | | | | | 40.0 |
| 42.0 | | | | | | | | | | | | | | | | | | | | | 42.0 |
| 44.0 | | | | | | | | | | | | | | | | | | | | | 44.0 |
| 46.0 | | | | | | | | | | | | | | | | | | | | | 46.0 |
| 48.0 | | | | | | | | | | | | | | | | | | | | | 48.0 |
| 50.0 | | | | | | | | | | | | | | | | | | | | | 50.0 |
| 52.0 | | | | | | | | | | | | | | | | | | | | | 52.0 |
| 54.0 | | | | | | | | | | | | | | | | | | | | | 54.0 |
| 55.0 | | | | | | | | | | | | | | | | | | | | | 55.0 |
| 56.0 | | | | | | | | | | | | | | | | | | | | | 56.0 |
| % 1 | 0 | 0 | 0 | 0 | 0 | 0 | 0 | 0 | 46 | 46 | 46 | 46 | 92 | 92 | 92 | 92 | 100 | 100 | 100 | 100 | 1 |
| % 2 | 0 | 0 | 0 | 0 | 92 | 92 | 92 | 92 | 92 | 92 | 92 | 92 | 92 | 92 | 92 | 92 | 100 | 100 | 100 | 100 | 2 |
| % 3 | 0 | 0 | 0 | 0 | 92 | 92 | 92 | 92 | 92 | 92 | 92 | 92 | 92 | 92 | 92 | 92 | 100 | 100 | 100 | 100 | 3 |
| % 4 | 0 | 0 | 0 | 0 | 92 | 92 | 92 | 92 | 92 | 92 | 92 | 92 | 92 | 92 | 92 | 92 | 100 | 100 | 100 | 100 | 4 |
| % 5 | 0 | 0 | 0 | 0 | 92 | 92 | 92 | 92 | 92 | 92 | 92 | 92 | 92 | 92 | 92 | 92 | 100 | 100 | 100 | 100 | 5 |
| ID | 1 | 1 | 1 | 1 | 9 | 9 | 9 | 9 | 10 | 10 | 10 | 10 | 11 | 11 | 11 | 11 | 22 | 22 | 22 | 22 | ID |
| [DEG] | 0～84 | 40～84 | 57～84 | 71～84 | 41～84 | 43～84 | 56～84 | 69～84 | 49～84 | 51～84 | 57～84 | 68～84 | 55～84 | 57～84 | 57～84 | 68～84 | 58～84 | 59～84 | 60～84 | 70～84 | [DEG] |
| | 1 | 1 | 1 | 1 | 1 | 1 | 1 | 1 | 1 | 1 | 1 | 1 | 1 | 1 | 1 | 1 | 1 | 1 | 1 | 1 | |
| | 5t | 5t | 5t | 5t | 5t | 5t | 5t | 5t | 5t | 5t | 5t | 5t | 5t | 5t | 5t | 5t | 5t | 5t | 5t | 5t | |

| FAJ | 17.7m | 0.0 t | 7.6m | 360 ° | JPN |
|---|---|---|---|---|---|

| m | 10.2 | 10.2 | 10.2 | 10.2 | 38.2 | 38.2 | 38.2 | 38.2 | 41.7 | 41.7 | 41.7 | 41.7 | 45.2 | 45.2 | 45.2 | 45.2 | 48.0 | 48.0 | 48.0 | 48.0 | m |
|---|---|---|---|---|---|---|---|---|---|---|---|---|---|---|---|---|---|---|---|---|---|
| ° | 5 | 25 | 45 | 60 | 5 | 25 | 45 | 60 | 5 | 25 | 45 | 60 | 5 | 25 | 45 | 60 | 5 | 25 | 45 | 60 | ° |
| 2.0 | | | | | | | | | | | | | | | | | | | | | 2.0 |
| 3.0 | 1.50 | | | | | | | | | | | | | | | | | | | | 3.0 |
| 4.0 | 1.50 | | | | | | | | | | | | | | | | | | | | 4.0 |
| 5.0 | 1.50 | | | | | | | | | | | | | | | | | | | | 5.0 |
| 6.0 | 1.50 | | | | | | | | | | | | | | | | | | | | 6.0 |
| 7.0 | 1.50 | | | | | | | | | | | | | | | | | | | | 7.0 |
| 8.0 | 1.50 | | | | 1.50 | | | | | | | | | | | | | | | | 8.0 |
| 9.0 | 1.50 | 1.25 | | | 1.50 | | | | 1.50 | | | | 1.45 | | | | | | | | 9.0 |
| 10.0 | 1.45 | 1.15 | | | 1.50 | | | | 1.50 | | | | 1.45 | | | | 1.35 | | | | 10.0 |
| 11.0 | 1.35 | 1.10 | | | 1.50 | | | | 1.45 | | | | 1.40 | | | | 1.35 | | | | 11.0 |
| 12.0 | 1.25 | 1.05 | | | 1.45 | | | | 1.45 | | | | 1.40 | | | | 1.35 | | | | 12.0 |
| 13.0 | 1.20 | 1.00 | | | 1.45 | | | | 1.40 | | | | 1.35 | | | | 1.30 | | | | 13.0 |
| 14.0 | 1.15 | 0.95 | 0.85 | | 1.40 | | | | 1.40 | | | | 1.35 | | | | 1.30 | | | | 14.0 |
| 16.0 | 1.00 | 0.90 | 0.80 | 0.55 | 1.35 | 1.00 | | | 1.30 | 1.00 | | | 1.30 | 1.00 | | | 1.25 | | | | 16.0 |
| 18.0 | 0.95 | 0.85 | 0.75 | 0.50 | 1.30 | 0.95 | | | 1.25 | 0.95 | | | 1.25 | 0.95 | | | 1.20 | 0.95 | | | 18.0 |
| 20.0 | 0.85 | 0.80 | 0.75 | 0.50 | 1.20 | 0.90 | 0.75 | | 1.20 | 0.90 | 0.75 | | 1.20 | 0.90 | | | 1.15 | 0.90 | | | 20.0 |
| 22.0 | 0.80 | 0.75 | 0.70 | | 1.15 | 0.90 | 0.75 | 0.50 | 1.15 | 0.90 | 0.75 | 0.50 | 1.15 | 0.90 | 0.75 | | 1.15 | 0.90 | 0.75 | | 22.0 |
| 24.0 | 0.75 | 0.75 | | | 1.10 | 0.85 | 0.70 | 0.45 | 1.10 | 0.85 | 0.70 | 0.45 | 1.10 | 0.85 | 0.70 | 0.45 | 1.10 | 0.85 | 0.70 | 0.45 | 24.0 |
| 26.0 | | | | | 1.05 | 0.85 | 0.70 | 0.45 | 1.05 | 0.85 | 0.70 | 0.45 | 1.05 | 0.85 | 0.70 | 0.45 | 1.05 | 0.85 | 0.70 | 0.45 | 26.0 |
| 28.0 | | | | | 1.00 | 0.80 | 0.70 | 0.45 | 1.00 | 0.80 | 0.70 | 0.45 | 1.05 | 0.80 | 0.70 | 0.45 | 1.00 | 0.80 | 0.70 | 0.45 | 28.0 |
| 30.0 | | | | | 0.95 | 0.80 | 0.70 | 0.45 | 0.95 | 0.80 | 0.70 | 0.45 | 1.00 | 0.80 | 0.70 | 0.45 | 1.00 | 0.80 | 0.70 | 0.45 | 30.0 |
| 32.0 | | | | | 0.90 | 0.75 | 0.70 | | 0.95 | 0.75 | 0.70 | 0.40 | 0.95 | 0.75 | 0.70 | 0.40 | 0.95 | 0.75 | 0.70 | 0.40 | 32.0 |
| 34.0 | | | | | 0.85 | 0.75 | 0.70 | | 0.90 | 0.75 | 0.70 | | 0.90 | 0.75 | 0.70 | 0.40 | 0.90 | 0.75 | 0.70 | 0.40 | 34.0 |
| 36.0 | | | | | 0.85 | 0.75 | 0.70 | | 0.85 | 0.75 | 0.70 | | 0.80 | 0.75 | 0.70 | | 0.70 | 0.75 | 0.65 | 0.40 | 36.0 |
| 38.0 | | | | | 0.80 | 0.70 | 0.70 | | 0.75 | 0.70 | 0.70 | | 0.55 | 0.70 | 0.65 | | | 0.70 | 0.65 | | 38.0 |
| 40.0 | | | | | 0.70 | 0.70 | 0.70 | | 0.55 | 0.70 | 0.70 | | | 0.65 | 0.65 | | | 0.60 | 0.65 | | 40.0 |
| 42.0 | | | | | 0.50 | 0.70 | | | | 0.60 | 0.70 | | | | 0.55 | | | | 0.55 | | 42.0 |
| 44.0 | | | | | | 0.50 | | | | | | | | | | | | | | | 44.0 |
| 46.0 | | | | | | | | | | | | | | | | | | | | | 46.0 |
| 48.0 | | | | | | | | | | | | | | | | | | | | | 48.0 |
| 50.0 | | | | | | | | | | | | | | | | | | | | | 50.0 |
| 52.0 | | | | | | | | | | | | | | | | | | | | | 52.0 |
| 54.0 | | | | | | | | | | | | | | | | | | | | | 54.0 |
| 55.0 | | | | | | | | | | | | | | | | | | | | | 55.0 |
| 56.0 | | | | | | | | | | | | | | | | | | | | | 56.0 |
| % 1 | 0 | 0 | 0 | 0 | 0 | 0 | 0 | 0 | 46 | 46 | 46 | 46 | 92 | 92 | 92 | 92 | 100 | 100 | 100 | 100 | 1 |
| % 2 | 0 | 0 | 0 | 0 | 92 | 92 | 92 | 92 | 92 | 92 | 92 | 92 | 92 | 92 | 92 | 92 | 100 | 100 | 100 | 100 | 2 |
| % 3 | 0 | 0 | 0 | 0 | 92 | 92 | 92 | 92 | 92 | 92 | 92 | 92 | 92 | 92 | 92 | 92 | 100 | 100 | 100 | 100 | 3 |
| % 4 | 0 | 0 | 0 | 0 | 92 | 92 | 92 | 92 | 92 | 92 | 92 | 92 | 92 | 92 | 92 | 92 | 100 | 100 | 100 | 100 | 4 |
| % 5 | 0 | 0 | 0 | 0 | 92 | 92 | 92 | 92 | 92 | 92 | 92 | 92 | 92 | 92 | 92 | 92 | 100 | 100 | 100 | 100 | 5 |
| ID | 1 | 1 | 1 | 1 | 9 | 9 | 9 | 9 | 10 | 10 | 10 | 10 | 11 | 11 | 11 | 11 | 22 | 22 | 22 | 22 | ID |
| [DEG] | 19～84 | 31～84 | 51～84 | 65～84 | 42～84 | 45～84 | 54～84 | 71～84 | 50～84 | 53～84 | 55～84 | 70～84 | 56～84 | 59～84 | 59～84 | 69～84 | 59～84 | 61～84 | 62～84 | 68～84 | [DEG] |
| | 1 | 1 | 1 | 1 | 1 | 1 | 1 | 1 | 1 | 1 | 1 | 1 | 1 | 1 | 1 | 1 | 1 | 1 | 1 | 1 | |
| | 5t | 5t | 5t | 5t | 5t | 5t | 5t | 5t | 5t | 5t | 5t | 5t | 5t | 5t | 5t | 5t | 5t | 5t | 5t | 5t | |

# フルオートジブ

| FAJ | 8.4m | 0.0 t | 7.2m | 360 ° | JPN |
|---|---|---|---|---|---|

| m | 10.2 | 10.2 | 10.2 | 10.2 | 38.2 | 38.2 | 38.2 | 38.2 | 41.7 | 41.7 | 41.7 | 41.7 | 45.2 | 45.2 | 45.2 | 45.2 | 48.0 | 48.0 | 48.0 | 48.0 | m |
|---|---|---|---|---|---|---|---|---|---|---|---|---|---|---|---|---|---|---|---|---|---|
| ° | 5 | 25 | 45 | 60 | 5 | 25 | 45 | 60 | 5 | 25 | 45 | 60 | 5 | 25 | 45 | 60 | 5 | 25 | 45 | 60 | ° |
| 2.0 | 4.00 | | | | | | | | | | | | | | | | | | | | 2.0 |
| 3.0 | 4.00 | | | | | | | | | | | | | | | | | | | | 3.0 |
| 4.0 | 4.00 | 4.00 | | | | | | | | | | | | | | | | | | | 4.0 |
| 5.0 | 4.00 | 4.00 | | | | | | | | | | | | | | | | | | | 5.0 |
| 6.0 | 4.00 | 4.00 | 3.00 | | | | | | | | | | | | | | | | | | 6.0 |
| 7.0 | 4.00 | 4.00 | 2.85 | | 4.00 | | | | 4.00 | | | | | | | | | | | | 7.0 |
| 8.0 | 4.00 | 4.00 | 2.70 | 1.60 | 4.00 | | | | 4.00 | | | | 4.00 | | | | 4.00 | | | | 8.0 |
| 9.0 | 4.00 | 4.00 | 2.55 | 1.55 | 4.00 | | | | 4.00 | | | | 4.00 | | | | 4.00 | | | | 9.0 |
| 10.0 | 4.00 | 3.90 | 2.45 | 1.50 | 4.00 | 4.00 | | | 4.00 | 4.00 | | | 4.00 | | | | 4.00 | | | | 10.0 |
| 11.0 | 4.00 | 3.70 | 2.35 | | 4.00 | 4.00 | | | 4.00 | 4.00 | | | 4.00 | 4.00 | | | 4.00 | | | | 11.0 |
| 12.0 | 4.00 | 3.50 | 2.30 | | 4.00 | 4.00 | 2.65 | 1.55 | 4.00 | 4.00 | 2.65 | | 4.00 | 3.95 | | | 4.00 | 3.70 | | | 12.0 |
| 13.0 | 4.00 | 3.35 | | | 4.00 | 4.00 | 2.60 | 1.50 | 4.00 | 3.90 | 2.60 | 1.50 | 4.00 | 3.80 | 2.60 | | 3.95 | 3.55 | | | 13.0 |
| 14.0 | 4.00 | 3.20 | | | 4.00 | 3.85 | 2.55 | 1.50 | 4.00 | 3.75 | 2.55 | 1.50 | 4.00 | 3.65 | 2.55 | 1.50 | 3.85 | 3.45 | 2.60 | 1.50 | 14.0 |
| 16.0 | | | | | 4.00 | 3.60 | 2.45 | 1.45 | 3.95 | 3.50 | 2.45 | 1.45 | 3.85 | 3.40 | 2.45 | 1.45 | 3.55 | 3.20 | 2.50 | 1.45 | 16.0 |
| 18.0 | | | | | 3.75 | 3.35 | 2.35 | 1.40 | 3.65 | 3.25 | 2.35 | 1.40 | 3.55 | 3.20 | 2.40 | 1.40 | 3.30 | 3.05 | 2.40 | 1.40 | 18.0 |
| 20.0 | | | | | 3.50 | 3.15 | 2.25 | 1.40 | 3.40 | 3.05 | 2.30 | 1.40 | 3.30 | 3.00 | 2.30 | 1.40 | 3.05 | 2.85 | 2.30 | 1.40 | 20.0 |
| 22.0 | | | | | 3.20 | 2.95 | 2.20 | 1.35 | 3.05 | 2.90 | 2.20 | 1.35 | 2.75 | 2.80 | 2.25 | 1.35 | 2.65 | 2.60 | 2.25 | 1.35 | 22.0 |
| 24.0 | | | | | 2.55 | 2.80 | 2.15 | | 2.40 | 2.70 | 2.15 | 1.35 | 2.10 | 2.45 | 2.15 | 1.35 | 2.05 | 2.25 | 2.20 | 1.35 | 24.0 |
| 26.0 | | | | | 2.05 | 2.25 | 2.10 | | 1.90 | 2.15 | 2.10 | | 1.60 | 1.90 | 2.10 | | 1.50 | 1.85 | 1.95 | 1.30 | 26.0 |
| 28.0 | | | | | 1.60 | 1.80 | 1.90 | | 1.45 | 1.70 | 1.80 | | 1.15 | 1.45 | 1.60 | | 1.05 | 1.35 | 1.55 | | 28.0 |
| 30.0 | | | | | 1.20 | 1.40 | 1.50 | | 1.05 | 1.25 | 1.40 | | 0.75 | 1.00 | 1.20 | | 0.70 | 0.95 | 1.15 | | 30.0 |
| 32.0 | | | | | 0.85 | 1.00 | | | 0.70 | 0.90 | 1.00 | | | 0.65 | 0.80 | | | | 0.75 | | 32.0 |
| 34.0 | | | | | 0.55 | 0.70 | | | 0.40 | 0.55 | | | | | | | | | | | 34.0 |
| 36.0 | | | | | | 0.40 | | | | | | | | | | | | | | | 36.0 |
| 38.0 | | | | | | | | | | | | | | | | | | | | | 38.0 |
| 40.0 | | | | | | | | | | | | | | | | | | | | | 40.0 |
| 42.0 | | | | | | | | | | | | | | | | | | | | | 42.0 |
| 44.0 | | | | | | | | | | | | | | | | | | | | | 44.0 |
| 46.0 | | | | | | | | | | | | | | | | | | | | | 46.0 |
| 48.0 | | | | | | | | | | | | | | | | | | | | | 48.0 |
| 50.0 | | | | | | | | | | | | | | | | | | | | | 50.0 |
| 52.0 | | | | | | | | | | | | | | | | | | | | | 52.0 |
| 54.0 | | | | | | | | | | | | | | | | | | | | | 54.0 |
| 55.0 | | | | | | | | | | | | | | | | | | | | | 55.0 |
| 56.0 | | | | | | | | | | | | | | | | | | | | | 56.0 |
| 1 | 0 | 0 | 0 | 0 | 0 | 0 | 0 | 0 | 46 | 46 | 46 | 46 | 92 | 92 | 92 | 92 | 100 | 100 | 100 | 100 | 1 |
| 2 | 0 | 0 | 0 | 0 | 92 | 92 | 92 | 92 | 92 | 92 | 92 | 92 | 92 | 92 | 92 | 92 | 100 | 100 | 100 | 100 | 2 |
| 3 | 0 | 0 | 0 | 0 | 92 | 92 | 92 | 92 | 92 | 92 | 92 | 92 | 92 | 92 | 92 | 92 | 100 | 100 | 100 | 100 | 3 |
| 4 | 0 | 0 | 0 | 0 | 92 | 92 | 92 | 92 | 92 | 92 | 92 | 92 | 92 | 92 | 92 | 92 | 100 | 100 | 100 | 100 | 4 |
| 5 | 0 | 0 | 0 | 0 | 92 | 92 | 92 | 92 | 92 | 92 | 92 | 92 | 92 | 92 | 92 | 92 | 100 | 100 | 100 | 100 | 5 |
| ID | 1 | 1 | 1 | 1 | 9 | 9 | 9 | 9 | 10 | 10 | 10 | 10 | 11 | 11 | 11 | 11 | 22 | 22 | 22 | 22 | ID |
| [DEG] | 28～84 | 35～84 | 54～84 | 68～84 | 41～84 | 40～84 | 54～84 | 68～84 | 46～84 | 49～84 | 54～84 | 67～84 | 56～84 | 57～84 | 58～84 | 69～84 | 58～84 | 61～84 | 60～84 | 68～84 | [DEG] |
| | 1 | 1 | 1 | 1 | 1 | 1 | 1 | 1 | 1 | 1 | 1 | 1 | 1 | 1 | 1 | 1 | 1 | 1 | 1 | 1 | |
| | 5t | 5t | 5t | 5t | 5t | 5t | 5t | 5t | 5t | 5t | 5t | 5t | 5t | 5t | 5t | 5t | 5t | 5t | 5t | 5t | |

| FAJ | 13.1m | 0.0 t | 7.2m | 360 ° | JPN |
|---|---|---|---|---|---|

| m | 10.2 | 10.2 | 10.2 | 10.2 | 38.2 | 38.2 | 38.2 | 38.2 | 41.7 | 41.7 | 41.7 | 41.7 | 45.2 | 45.2 | 45.2 | 45.2 | 48.0 | 48.0 | 48.0 | 48.0 | m |
|---|---|---|---|---|---|---|---|---|---|---|---|---|---|---|---|---|---|---|---|---|---|
| ° | 5 | 25 | 45 | 60 | 5 | 25 | 45 | 60 | 5 | 25 | 45 | 60 | 5 | 25 | 45 | 60 | 5 | 25 | 45 | 60 | ° |
| 2.0 | 2.80 | | | | | | | | | | | | | | | | | | | | 2.0 |
| 3.0 | 2.80 | | | | | | | | | | | | | | | | | | | | 3.0 |
| 4.0 | 2.80 | | | | | | | | | | | | | | | | | | | | 4.0 |
| 5.0 | 2.80 | | | | | | | | | | | | | | | | | | | | 5.0 |
| 6.0 | 2.80 | | | | | | | | | | | | | | | | | | | | 6.0 |
| 7.0 | 2.80 | 2.60 | | | | | | | | | | | | | | | | | | | 7.0 |
| 8.0 | 2.80 | 2.45 | | | 2.80 | | | | 2.80 | | | | | | | | | | | | 8.0 |
| 9.0 | 2.80 | 2.30 | | | 2.80 | | | | 2.80 | | | | 2.80 | | | | | | | | 9.0 |
| 10.0 | 2.65 | 2.20 | 1.75 | | 2.80 | | | | 2.80 | | | | 2.80 | | | | 2.65 | | | | 10.0 |
| 11.0 | 2.50 | 2.10 | 1.65 | | 2.80 | | | | 2.80 | | | | 2.80 | | | | 2.65 | | | | 11.0 |
| 12.0 | 2.35 | 2.00 | 1.55 | 0.90 | 2.80 | | | | 2.80 | | | | 2.75 | | | | 2.60 | | | | 12.0 |
| 13.0 | 2.25 | 1.95 | 1.50 | 0.85 | 2.80 | 2.20 | | | 2.80 | 2.20 | | | 2.70 | | | | 2.55 | | | | 13.0 |
| 14.0 | 2.10 | 1.85 | 1.45 | 0.85 | 2.80 | 2.15 | | | 2.75 | 2.15 | | | 2.65 | 2.15 | | | 2.55 | | | | 14.0 |
| 16.0 | 1.95 | 1.75 | 1.35 | | 2.70 | 2.05 | 1.55 | | 2.65 | 2.05 | 1.55 | | 2.60 | 2.05 | | | 2.45 | 2.05 | | | 16.0 |
| 18.0 | 1.80 | 1.65 | | | 2.55 | 2.00 | 1.50 | 0.80 | 2.55 | 2.00 | 1.50 | 0.80 | 2.50 | 2.00 | 1.50 | 0.80 | 2.40 | 1.95 | 1.50 | | 18.0 |
| 20.0 | 1.70 | | | | 2.45 | 1.90 | 1.40 | 0.80 | 2.45 | 1.90 | 1.45 | 0.80 | 2.45 | 1.90 | 1.45 | 0.80 | 2.35 | 1.90 | 1.45 | 0.80 | 20.0 |
| 22.0 | | | | | 2.30 | 1.85 | 1.35 | 0.75 | 2.35 | 1.85 | 1.35 | 0.75 | 2.35 | 1.85 | 1.40 | 0.75 | 2.30 | 1.85 | 1.40 | 0.75 | 22.0 |
| 24.0 | | | | | 2.20 | 1.80 | 1.30 | 0.75 | 2.25 | 1.80 | 1.35 | 0.75 | 2.25 | 1.80 | 1.35 | 0.75 | 2.25 | 1.80 | 1.35 | 0.75 | 24.0 |
| 26.0 | | | | | 2.10 | 1.75 | 1.25 | 0.75 | 2.15 | 1.75 | 1.30 | 0.75 | 1.95 | 1.75 | 1.30 | 0.75 | 1.90 | 1.75 | 1.30 | 0.75 | 26.0 |
| 28.0 | | | | | 1.95 | 1.70 | 1.25 | | 1.80 | 1.70 | 1.25 | 0.75 | 1.50 | 1.75 | 1.25 | 0.70 | 1.45 | 1.75 | 1.25 | 0.70 | 28.0 |
| 30.0 | | | | | 1.55 | 1.70 | 1.20 | | 1.40 | 1.70 | 1.20 | | 1.15 | 1.55 | 1.20 | 0.70 | 1.05 | 1.45 | 1.20 | 0.70 | 30.0 |
| 32.0 | | | | | 1.25 | 1.50 | 1.20 | | 1.05 | 1.40 | 1.20 | | 0.80 | 1.15 | 1.20 | | 0.70 | 1.10 | 1.20 | | 32.0 |
| 34.0 | | | | | 0.95 | 1.15 | 1.15 | | 0.75 | 1.05 | 1.15 | | | 0.85 | 1.05 | | | 0.75 | 1.00 | | 34.0 |
| 36.0 | | | | | 0.65 | 0.85 | | | 0.50 | 0.75 | 0.90 | | | | 0.70 | | | | 0.65 | | 36.0 |
| 38.0 | | | | | | 0.60 | | | | 0.50 | | | | | | | | | | | 38.0 |
| 40.0 | | | | | | | | | | | | | | | | | | | | | 40.0 |
| 42.0 | | | | | | | | | | | | | | | | | | | | | 42.0 |
| 44.0 | | | | | | | | | | | | | | | | | | | | | 44.0 |
| 46.0 | | | | | | | | | | | | | | | | | | | | | 46.0 |
| 48.0 | | | | | | | | | | | | | | | | | | | | | 48.0 |
| 50.0 | | | | | | | | | | | | | | | | | | | | | 50.0 |
| 52.0 | | | | | | | | | | | | | | | | | | | | | 52.0 |
| 54.0 | | | | | | | | | | | | | | | | | | | | | 54.0 |
| 55.0 | | | | | | | | | | | | | | | | | | | | | 55.0 |
| 56.0 | | | | | | | | | | | | | | | | | | | | | 56.0 |
| 1 | 0 | 0 | 0 | 0 | 0 | 0 | 0 | 0 | 46 | 46 | 46 | 46 | 92 | 92 | 92 | 92 | 100 | 100 | 100 | 100 | 1 |
| 2 | 0 | 0 | 0 | 0 | 92 | 92 | 92 | 92 | 92 | 92 | 92 | 92 | 92 | 92 | 92 | 92 | 100 | 100 | 100 | 100 | 2 |
| 3 | 0 | 0 | 0 | 0 | 92 | 92 | 92 | 92 | 92 | 92 | 92 | 92 | 92 | 92 | 92 | 92 | 100 | 100 | 100 | 100 | 3 |
| 4 | 0 | 0 | 0 | 0 | 92 | 92 | 92 | 92 | 92 | 92 | 92 | 92 | 92 | 92 | 92 | 92 | 100 | 100 | 100 | 100 | 4 |
| 5 | 0 | 0 | 0 | 0 | 92 | 92 | 92 | 92 | 92 | 92 | 92 | 92 | 92 | 92 | 92 | 92 | 100 | 100 | 100 | 100 | 5 |
| ID | 1 | 1 | 1 | 1 | 9 | 9 | 9 | 9 | 10 | 10 | 10 | 10 | 11 | 11 | 11 | 11 | 22 | 22 | 22 | 22 | ID |
| [DEG] | 0～84 | 40～84 | 57～84 | 71～84 | 45～84 | 47～84 | 56～84 | 69～84 | 49～84 | 51～84 | 57～84 | 68～84 | 58～84 | 60～84 | 60～84 | 68～84 | 60～84 | 62～84 | 62～84 | 70～84 | [DEG] |
| | 1 | 1 | 1 | 1 | 1 | 1 | 1 | 1 | 1 | 1 | 1 | 1 | 1 | 1 | 1 | 1 | 1 | 1 | 1 | 1 | |
| | 5t | 5t | 5t | 5t | 5t | 5t | 5t | 5t | 5t | 5t | 5t | 5t | 5t | 5t | 5t | 5t | 5t | 5t | 5t | 5t | |

| FAJ | 17.7m | 0.0 t | 7.2m | 360 ° | JPN |
|---|---|---|---|---|---|

| m | 10.2 | 10.2 | 10.2 | 10.2 | 38.2 | 38.2 | 38.2 | 38.2 | 41.7 | 41.7 | 41.7 | 41.7 | 45.2 | 45.2 | 45.2 | 45.2 | 48.0 | 48.0 | 48.0 | 48.0 | m |
|---|---|---|---|---|---|---|---|---|---|---|---|---|---|---|---|---|---|---|---|---|---|
| ° | 5 | 25 | 45 | 60 | 5 | 25 | 45 | 60 | 5 | 25 | 45 | 60 | 5 | 25 | 45 | 60 | 5 | 25 | 45 | 60 | ° |
| 2.0 | | | | | | | | | | | | | | | | | | | | | 2.0 |
| 3.0 | 1.50 | | | | | | | | | | | | | | | | | | | | 3.0 |
| 4.0 | 1.50 | | | | | | | | | | | | | | | | | | | | 4.0 |
| 5.0 | 1.50 | | | | | | | | | | | | | | | | | | | | 5.0 |
| 6.0 | 1.50 | | | | | | | | | | | | | | | | | | | | 6.0 |
| 7.0 | 1.50 | | | | | | | | | | | | | | | | | | | | 7.0 |
| 8.0 | 1.50 | | | | 1.50 | | | | | | | | | | | | | | | | 8.0 |
| 9.0 | 1.50 | 1.25 | | | 1.50 | | | | 1.50 | | | | 1.45 | | | | | | | | 9.0 |
| 10.0 | 1.45 | 1.15 | | | 1.50 | | | | 1.50 | | | | 1.45 | | | | 1.35 | | | | 10.0 |
| 11.0 | 1.35 | 1.10 | | | 1.50 | | | | 1.45 | | | | 1.40 | | | | 1.35 | | | | 11.0 |
| 12.0 | 1.25 | 1.05 | | | 1.45 | | | | 1.45 | | | | 1.40 | | | | 1.35 | | | | 12.0 |
| 13.0 | 1.20 | 1.00 | | | 1.45 | | | | 1.40 | | | | 1.35 | | | | 1.30 | | | | 13.0 |
| 14.0 | 1.15 | 0.95 | 0.85 | | 1.40 | | | | 1.40 | | | | 1.35 | | | | 1.30 | | | | 14.0 |
| 16.0 | 1.00 | 0.90 | 0.80 | 0.55 | 1.35 | 1.00 | | | 1.30 | 1.00 | | | 1.30 | 1.00 | | | 1.25 | | | | 16.0 |
| 18.0 | 0.95 | 0.85 | 0.75 | 0.50 | 1.30 | 0.95 | | | 1.25 | 0.95 | | | 1.25 | 0.95 | | | 1.20 | 0.95 | | | 18.0 |
| 20.0 | 0.85 | 0.80 | 0.75 | 0.50 | 1.20 | 0.90 | 0.75 | | 1.20 | 0.90 | 0.75 | | 1.20 | 0.90 | | | 1.15 | 0.90 | | | 20.0 |
| 22.0 | 0.80 | 0.75 | 0.70 | | 1.15 | 0.90 | 0.75 | 0.50 | 1.15 | 0.90 | 0.75 | 0.50 | 1.15 | 0.90 | 0.75 | | 1.15 | 0.90 | 0.75 | | 22.0 |
| 24.0 | 0.75 | 0.75 | | | 1.10 | 0.85 | 0.70 | 0.45 | 1.10 | 0.85 | 0.70 | 0.45 | 1.10 | 0.85 | 0.70 | 0.45 | 1.10 | 0.85 | 0.70 | 0.45 | 24.0 |
| 26.0 | | | | | 1.05 | 0.85 | 0.70 | 0.45 | 1.05 | 0.85 | 0.70 | 0.45 | 1.05 | 0.85 | 0.70 | 0.45 | 1.05 | 0.85 | 0.70 | 0.45 | 26.0 |
| 28.0 | | | | | 1.00 | 0.80 | 0.70 | 0.45 | 1.00 | 0.80 | 0.70 | 0.45 | 1.05 | 0.80 | 0.70 | 0.45 | 1.00 | 0.80 | 0.70 | 0.45 | 28.0 |
| 30.0 | | | | | 0.95 | 0.80 | 0.70 | 0.45 | 0.95 | 0.80 | 0.70 | 0.45 | 1.00 | 0.80 | 0.70 | 0.45 | 1.00 | 0.80 | 0.70 | 0.45 | 30.0 |
| 32.0 | | | | | 0.90 | 0.75 | 0.70 | | 0.95 | 0.75 | 0.70 | 0.40 | 0.95 | 0.75 | 0.70 | 0.40 | 0.95 | 0.75 | 0.70 | 0.40 | 32.0 |
| 34.0 | | | | | 0.85 | 0.75 | 0.70 | | 0.90 | 0.75 | 0.70 | | 0.80 | 0.75 | 0.70 | 0.40 | 0.75 | 0.75 | 0.70 | 0.40 | 34.0 |
| 36.0 | | | | | 0.85 | 0.75 | 0.70 | | 0.80 | 0.75 | 0.70 | | | 0.75 | 0.70 | | | 0.75 | 0.65 | 0.40 | 36.0 |
| 38.0 | | | | | 0.75 | 0.70 | 0.70 | | 0.55 | 0.70 | 0.70 | | | 0.70 | 0.65 | | | 0.60 | 0.65 | | 38.0 |
| 40.0 | | | | | 0.50 | 0.70 | 0.70 | | | 0.65 | 0.70 | | | | 0.65 | | | | 0.60 | | 40.0 |
| 42.0 | | | | | | 0.55 | | | | 0.40 | 0.55 | | | | | | | | | | 42.0 |
| 44.0 | | | | | | | | | | | | | | | | | | | | | 44.0 |
| 46.0 | | | | | | | | | | | | | | | | | | | | | 46.0 |
| 48.0 | | | | | | | | | | | | | | | | | | | | | 48.0 |
| 50.0 | | | | | | | | | | | | | | | | | | | | | 50.0 |
| 52.0 | | | | | | | | | | | | | | | | | | | | | 52.0 |
| 54.0 | | | | | | | | | | | | | | | | | | | | | 54.0 |
| 55.0 | | | | | | | | | | | | | | | | | | | | | 55.0 |
| 56.0 | | | | | | | | | | | | | | | | | | | | | 56.0 |
| 1 | 0 | 0 | 0 | 0 | 0 | 0 | 0 | 0 | 46 | 46 | 46 | 46 | 92 | 92 | 92 | 92 | 100 | 100 | 100 | 100 | 1 |
| 2 | 0 | 0 | 0 | 0 | 92 | 92 | 92 | 92 | 92 | 92 | 92 | 92 | 92 | 92 | 92 | 92 | 100 | 100 | 100 | 100 | 2 |
| 3 | 0 | 0 | 0 | 0 | 92 | 92 | 92 | 92 | 92 | 92 | 92 | 92 | 92 | 92 | 92 | 92 | 100 | 100 | 100 | 100 | 3 |
| 4 | 0 | 0 | 0 | 0 | 92 | 92 | 92 | 92 | 92 | 92 | 92 | 92 | 92 | 92 | 92 | 92 | 100 | 100 | 100 | 100 | 4 |
| 5 | 0 | 0 | 0 | 0 | 92 | 92 | 92 | 92 | 92 | 92 | 92 | 92 | 92 | 92 | 92 | 92 | 100 | 100 | 100 | 100 | 5 |
| ID | 1 | 1 | 1 | 1 | 9 | 9 | 9 | 9 | 10 | 10 | 10 | 10 | 11 | 11 | 11 | 11 | 22 | 22 | 22 | 22 | ID |
| [DEG] | 19～84 | 31～84 | 51～84 | 65～84 | 46～84 | 49～84 | 54～84 | 71～84 | 52～84 | 53～84 | 55～84 | 70～84 | 60～84 | 61～84 | 62～84 | 69～84 | 61～84 | 63～84 | 64～84 | 68～84 | [DEG] |
| | 1 | 1 | 1 | 1 | 1 | 1 | 1 | 1 | 1 | 1 | 1 | 1 | 1 | 1 | 1 | 1 | 1 | 1 | 1 | 1 | |
| | 5t | 5t | 5t | 5t | 5t | 5t | 5t | 5t | 5t | 5t | 5t | 5t | 5t | 5t | 5t | 5t | 5t | 5t | 5t | 5t | |

| FAJ | 8.4m | 0.0 t | 6.4m | 360 ° | JPN |
|---|---|---|---|---|---|

| m | 10.2 | 10.2 | 10.2 | 10.2 | 38.2 | 38.2 | 38.2 | 38.2 | 41.7 | 41.7 | 41.7 | 41.7 | 45.2 | 45.2 | 45.2 | 45.2 | 48.0 | 48.0 | 48.0 | 48.0 | m |
|---|---|---|---|---|---|---|---|---|---|---|---|---|---|---|---|---|---|---|---|---|---|
| ° | 5 | 25 | 45 | 60 | 5 | 25 | 45 | 60 | 5 | 25 | 45 | 60 | 5 | 25 | 45 | 60 | 5 | 25 | 45 | 60 | ° |
| 2.0 | 4.00 | | | | | | | | | | | | | | | | | | | | 2.0 |
| 3.0 | 4.00 | | | | | | | | | | | | | | | | | | | | 3.0 |
| 4.0 | 4.00 | 4.00 | | | | | | | | | | | | | | | | | | | 4.0 |
| 5.0 | 4.00 | 4.00 | | | | | | | | | | | | | | | | | | | 5.0 |
| 6.0 | 4.00 | 4.00 | 3.00 | | | | | | | | | | | | | | | | | | 6.0 |
| 7.0 | 4.00 | 4.00 | 2.85 | | 4.00 | | | | 4.00 | | | | | | | | | | | | 7.0 |
| 8.0 | 4.00 | 4.00 | 2.70 | 1.60 | 4.00 | | | | 4.00 | | | | 4.00 | | | | 4.00 | | | | 8.0 |
| 9.0 | 4.00 | 4.00 | 2.55 | 1.55 | 4.00 | | | | 4.00 | | | | 4.00 | | | | 4.00 | | | | 9.0 |
| 10.0 | 4.00 | 3.90 | 2.45 | 1.50 | 4.00 | 4.00 | | | 4.00 | 4.00 | | | 4.00 | | | | 4.00 | | | | 10.0 |
| 11.0 | 4.00 | 3.70 | 2.35 | | 4.00 | 4.00 | | | 4.00 | 4.00 | | | 4.00 | 4.00 | | | 4.00 | | | | 11.0 |
| 12.0 | 4.00 | 3.50 | 2.30 | | 4.00 | 4.00 | 2.65 | 1.55 | 4.00 | 4.00 | 2.65 | | 4.00 | 3.95 | | | 4.00 | 3.70 | | | 12.0 |
| 13.0 | 4.00 | 3.35 | | | 4.00 | 4.00 | 2.60 | 1.50 | 4.00 | 3.90 | 2.60 | 1.50 | 4.00 | 3.80 | 2.60 | | 3.95 | 3.55 | | | 13.0 |
| 14.0 | 4.00 | 3.20 | | | 4.00 | 3.85 | 2.55 | 1.50 | 4.00 | 3.75 | 2.55 | 1.50 | 4.00 | 3.65 | 2.55 | 1.50 | 3.85 | 3.45 | 2.60 | 1.50 | 14.0 |
| 16.0 | | | | | 4.00 | 3.60 | 2.45 | 1.45 | 3.95 | 3.50 | 2.45 | 1.45 | 3.85 | 3.40 | 2.45 | 1.45 | 3.55 | 3.20 | 2.50 | 1.45 | 16.0 |
| 18.0 | | | | | 3.75 | 3.35 | 2.35 | 1.40 | 3.65 | 3.25 | 2.35 | 1.40 | 3.40 | 3.20 | 2.40 | 1.40 | 3.25 | 3.05 | 2.40 | 1.40 | 18.0 |
| 20.0 | | | | | 3.15 | 3.15 | 2.25 | 1.40 | 2.95 | 3.05 | 2.30 | 1.40 | 2.60 | 3.00 | 2.30 | 1.40 | 2.50 | 2.85 | 2.30 | 1.40 | 20.0 |
| 22.0 | | | | | 2.45 | 2.80 | 2.20 | 1.35 | 2.25 | 2.65 | 2.20 | 1.35 | 1.95 | 2.35 | 2.25 | 1.35 | 1.85 | 2.25 | 2.25 | 1.35 | 22.0 |
| 24.0 | | | | | 1.90 | 2.20 | 2.15 | | 1.70 | 2.05 | 2.15 | 1.35 | 1.40 | 1.75 | 2.00 | 1.35 | 1.30 | 1.70 | 1.95 | 1.35 | 24.0 |
| 26.0 | | | | | 1.45 | 1.70 | 1.85 | | 1.25 | 1.55 | 1.75 | | 0.95 | 1.25 | 1.45 | | 0.85 | 1.20 | 1.40 | 1.30 | 26.0 |
| 28.0 | | | | | 1.05 | 1.25 | 1.40 | | 0.85 | 1.10 | 1.25 | | | 0.80 | 1.00 | | | | 0.95 | | 28.0 |
| 30.0 | | | | | 0.70 | 0.90 | 1.00 | | | 0.75 | 0.85 | | | | | | | | | | 30.0 |
| 32.0 | | | | | 0.40 | 0.55 | | | | | 0.50 | | | | | | | | | | 32.0 |
| 34.0 | | | | | | | | | | | | | | | | | | | | | 34.0 |
| 36.0 | | | | | | | | | | | | | | | | | | | | | 36.0 |
| 38.0 | | | | | | | | | | | | | | | | | | | | | 38.0 |
| 40.0 | | | | | | | | | | | | | | | | | | | | | 40.0 |
| 42.0 | | | | | | | | | | | | | | | | | | | | | 42.0 |
| 44.0 | | | | | | | | | | | | | | | | | | | | | 44.0 |
| 46.0 | | | | | | | | | | | | | | | | | | | | | 46.0 |
| 48.0 | | | | | | | | | | | | | | | | | | | | | 48.0 |
| 50.0 | | | | | | | | | | | | | | | | | | | | | 50.0 |
| 52.0 | | | | | | | | | | | | | | | | | | | | | 52.0 |
| 54.0 | | | | | | | | | | | | | | | | | | | | | 54.0 |
| 55.0 | | | | | | | | | | | | | | | | | | | | | 55.0 |
| 56.0 | | | | | | | | | | | | | | | | | | | | | 56.0 |
| 1 | 0 | 0 | 0 | 0 | 0 | 0 | 0 | 0 | 46 | 46 | 46 | 46 | 92 | 92 | 92 | 92 | 100 | 100 | 100 | 100 | 1 |
| 2 | 0 | 0 | 0 | 0 | 92 | 92 | 92 | 92 | 92 | 92 | 92 | 92 | 92 | 92 | 92 | 92 | 100 | 100 | 100 | 100 | 2 |
| 3 | 0 | 0 | 0 | 0 | 92 | 92 | 92 | 92 | 92 | 92 | 92 | 92 | 92 | 92 | 92 | 92 | 100 | 100 | 100 | 100 | 3 |
| 4 | 0 | 0 | 0 | 0 | 92 | 92 | 92 | 92 | 92 | 92 | 92 | 92 | 92 | 92 | 92 | 92 | 100 | 100 | 100 | 100 | 4 |
| 5 | 0 | 0 | 0 | 0 | 92 | 92 | 92 | 92 | 92 | 92 | 92 | 92 | 92 | 92 | 92 | 92 | 100 | 100 | 100 | 100 | 5 |
| ID | 1 | 1 | 1 | 1 | 9 | 9 | 9 | 9 | 10 | 10 | 10 | 10 | 11 | 11 | 11 | 11 | 22 | 22 | 22 | 22 | ID |
| [DEG] | 28～84 | 35～84 | 54～84 | 68～84 | 45～84 | 48～84 | 54～84 | 68～84 | 55～84 | 56～84 | 54～84 | 67～84 | 61～84 | 62～84 | 63～84 | 69～84 | 63～84 | 66～84 | 65～84 | 68～84 | [DEG] |
| | 1 | 1 | 1 | 1 | 1 | 1 | 1 | 1 | 1 | 1 | 1 | 1 | 1 | 1 | 1 | 1 | 1 | 1 | 1 | 1 | |
| | 5t | 5t | 5t | 5t | 5t | 5t | 5t | 5t | 5t | 5t | 5t | 5t | 5t | 5t | 5t | 5t | 5t | 5t | 5t | 5t | |

# フルオートジブ

| FAJ | 13.1m | 0.0 t | 6.4m | 360 ° | JPN |
|---|---|---|---|---|---|

| m | 10.2 | 10.2 | 10.2 | 10.2 | 38.2 | 38.2 | 38.2 | 38.2 | 41.7 | 41.7 | 41.7 | 41.7 | 45.2 | 45.2 | 45.2 | 45.2 | 48.0 | 48.0 | 48.0 | 48.0 | m |
|---|---|---|---|---|---|---|---|---|---|---|---|---|---|---|---|---|---|---|---|---|---|
| ° | 5 | 25 | 45 | 60 | 5 | 25 | 45 | 60 | 5 | 25 | 45 | 60 | 5 | 25 | 45 | 60 | 5 | 25 | 45 | 60 | ° |
| 2.0 | 2.80 | | | | | | | | | | | | | | | | | | | | 2.0 |
| 3.0 | 2.80 | | | | | | | | | | | | | | | | | | | | 3.0 |
| 4.0 | 2.80 | | | | | | | | | | | | | | | | | | | | 4.0 |
| 5.0 | 2.80 | | | | | | | | | | | | | | | | | | | | 5.0 |
| 6.0 | 2.80 | | | | | | | | | | | | | | | | | | | | 6.0 |
| 7.0 | 2.80 | 2.60 | | | | | | | | | | | | | | | | | | | 7.0 |
| 8.0 | 2.80 | 2.45 | | | 2.80 | | | | 2.80 | | | | | | | | | | | | 8.0 |
| 9.0 | 2.80 | 2.30 | | | 2.80 | | | | 2.80 | | | | 2.80 | | | | | | | | 9.0 |
| 10.0 | 2.65 | 2.20 | 1.75 | | 2.80 | | | | 2.80 | | | | 2.80 | | | | 2.65 | | | | 10.0 |
| 11.0 | 2.50 | 2.10 | 1.65 | | 2.80 | | | | 2.80 | | | | 2.80 | | | | 2.65 | | | | 11.0 |
| 12.0 | 2.35 | 2.00 | 1.55 | 0.90 | 2.80 | | | | 2.80 | | | | 2.75 | | | | 2.60 | | | | 12.0 |
| 13.0 | 2.25 | 1.95 | 1.50 | 0.85 | 2.80 | 2.20 | | | 2.80 | 2.20 | | | 2.70 | | | | 2.55 | | | | 13.0 |
| 14.0 | 2.10 | 1.85 | 1.45 | 0.85 | 2.80 | 2.15 | | | 2.75 | 2.15 | | | 2.65 | 2.15 | | | 2.55 | | | | 14.0 |
| 16.0 | 1.95 | 1.75 | 1.35 | | 2.70 | 2.05 | 1.55 | | 2.65 | 2.05 | 1.55 | | 2.60 | 2.05 | | | 2.45 | 2.05 | | | 16.0 |
| 18.0 | 1.80 | 1.65 | | | 2.55 | 2.00 | 1.50 | 0.80 | 2.55 | 2.00 | 1.50 | 0.80 | 2.50 | 2.00 | 1.50 | 0.80 | 2.40 | 1.95 | 1.50 | | 18.0 |
| 20.0 | 1.70 | | | | 2.45 | 1.90 | 1.40 | 0.80 | 2.45 | 1.90 | 1.45 | 0.80 | 2.45 | 1.90 | 1.45 | 0.80 | 2.35 | 1.90 | 1.45 | 0.80 | 20.0 |
| 22.0 | | | | | 2.30 | 1.85 | 1.35 | 0.75 | 2.35 | 1.85 | 1.35 | 0.75 | 2.30 | 1.85 | 1.40 | 0.75 | 2.20 | 1.85 | 1.40 | 0.75 | 22.0 |
| 24.0 | | | | | 2.20 | 1.80 | 1.30 | 0.75 | 2.10 | 1.80 | 1.35 | 0.75 | 1.75 | 1.80 | 1.35 | 0.75 | 1.70 | 1.80 | 1.35 | 0.75 | 24.0 |
| 26.0 | | | | | 1.80 | 1.75 | 1.25 | 0.75 | 1.65 | 1.75 | 1.30 | 0.75 | 1.30 | 1.75 | 1.30 | 0.75 | 1.25 | 1.75 | 1.30 | 0.75 | 26.0 |
| 28.0 | | | | | 1.40 | 1.70 | 1.25 | | 1.25 | 1.60 | 1.25 | 0.75 | 0.90 | 1.35 | 1.25 | 0.70 | 0.85 | 1.30 | 1.25 | 0.70 | 28.0 |
| 30.0 | | | | | 1.05 | 1.35 | 1.20 | | 0.90 | 1.25 | 1.20 | | | 0.95 | 1.20 | 0.70 | | 0.90 | 1.20 | 0.70 | 30.0 |
| 32.0 | | | | | 0.75 | 1.05 | 1.20 | | 0.60 | 0.90 | 1.10 | | | | 0.90 | | | | 0.85 | | 32.0 |
| 34.0 | | | | | 0.50 | 0.75 | 0.90 | | | 0.60 | 0.80 | | | | | | | | | | 34.0 |
| 36.0 | | | | | | | | | | | | | | | | | | | | | 36.0 |
| 38.0 | | | | | | | | | | | | | | | | | | | | | 38.0 |
| 40.0 | | | | | | | | | | | | | | | | | | | | | 40.0 |
| 42.0 | | | | | | | | | | | | | | | | | | | | | 42.0 |
| 44.0 | | | | | | | | | | | | | | | | | | | | | 44.0 |
| 46.0 | | | | | | | | | | | | | | | | | | | | | 46.0 |
| 48.0 | | | | | | | | | | | | | | | | | | | | | 48.0 |
| 50.0 | | | | | | | | | | | | | | | | | | | | | 50.0 |
| 52.0 | | | | | | | | | | | | | | | | | | | | | 52.0 |
| 54.0 | | | | | | | | | | | | | | | | | | | | | 54.0 |
| 55.0 | | | | | | | | | | | | | | | | | | | | | 55.0 |
| 56.0 | | | | | | | | | | | | | | | | | | | | | 56.0 |
| 1 | 0 | 0 | 0 | 0 | 0 | 0 | 0 | 0 | 46 | 46 | 46 | 46 | 92 | 92 | 92 | 92 | 100 | 100 | 100 | 100 | 1 |
| 2 | 0 | 0 | 0 | 0 | 92 | 92 | 92 | 92 | 92 | 92 | 92 | 92 | 92 | 92 | 92 | 92 | 100 | 100 | 100 | 100 | 2 |
| 3 | 0 | 0 | 0 | 0 | 92 | 92 | 92 | 92 | 92 | 92 | 92 | 92 | 92 | 92 | 92 | 92 | 100 | 100 | 100 | 100 | 3 |
| 4 | 0 | 0 | 0 | 0 | 92 | 92 | 92 | 92 | 92 | 92 | 92 | 92 | 92 | 92 | 92 | 92 | 100 | 100 | 100 | 100 | 4 |
| 5 | 0 | 0 | 0 | 0 | 92 | 92 | 92 | 92 | 92 | 92 | 92 | 92 | 92 | 92 | 92 | 92 | 100 | 100 | 100 | 100 | 5 |
| ID | 1 | 1 | 1 | 1 | 9 | 9 | 9 | 9 | 10 | 10 | 10 | 10 | 11 | 11 | 11 | 11 | 22 | 22 | 22 | 22 | ID |
| [DEG] | 0～84 | 40～84 | 57～84 | 71～84 | 48～84 | 53～84 | 56～84 | 69～84 | 54～84 | 57～84 | 59～84 | 68～84 | 62～84 | 64～84 | 65～84 | 68～84 | 64～84 | 66～84 | 66～84 | 70～84 | [DEG] |
| | 1 | 1 | 1 | 1 | 1 | 1 | 1 | 1 | 1 | 1 | 1 | 1 | 1 | 1 | 1 | 1 | 1 | 1 | 1 | 1 | |
| | 5t | 5t | 5t | 5t | 5t | 5t | 5t | 5t | 5t | 5t | 5t | 5t | 5t | 5t | 5t | 5t | 5t | 5t | 5t | 5t | |

| FAJ | 17.7m | 0.0 t | 6.4m | 360 ° | JPN |
|---|---|---|---|---|---|

| m | 10.2 | 10.2 | 10.2 | 10.2 | 38.2 | 38.2 | 38.2 | 38.2 | 41.7 | 41.7 | 41.7 | 41.7 | 45.2 | 45.2 | 45.2 | 45.2 | 48.0 | 48.0 | 48.0 | 48.0 | m |
|---|---|---|---|---|---|---|---|---|---|---|---|---|---|---|---|---|---|---|---|---|---|
| ° | 5 | 25 | 45 | 60 | 5 | 25 | 45 | 60 | 5 | 25 | 45 | 60 | 5 | 25 | 45 | 60 | 5 | 25 | 45 | 60 | ° |
| 2.0 | | | | | | | | | | | | | | | | | | | | | 2.0 |
| 3.0 | 1.50 | | | | | | | | | | | | | | | | | | | | 3.0 |
| 4.0 | 1.50 | | | | | | | | | | | | | | | | | | | | 4.0 |
| 5.0 | 1.50 | | | | | | | | | | | | | | | | | | | | 5.0 |
| 6.0 | 1.50 | | | | | | | | | | | | | | | | | | | | 6.0 |
| 7.0 | 1.50 | | | | | | | | | | | | | | | | | | | | 7.0 |
| 8.0 | 1.50 | | | | 1.50 | | | | | | | | | | | | | | | | 8.0 |
| 9.0 | 1.50 | 1.25 | | | 1.50 | | | | 1.50 | | | | 1.45 | | | | | | | | 9.0 |
| 10.0 | 1.45 | 1.15 | | | 1.50 | | | | 1.50 | | | | 1.45 | | | | 1.35 | | | | 10.0 |
| 11.0 | 1.35 | 1.10 | | | 1.50 | | | | 1.45 | | | | 1.40 | | | | 1.35 | | | | 11.0 |
| 12.0 | 1.25 | 1.05 | | | 1.45 | | | | 1.45 | | | | 1.40 | | | | 1.35 | | | | 12.0 |
| 13.0 | 1.20 | 1.00 | | | 1.45 | | | | 1.40 | | | | 1.35 | | | | 1.30 | | | | 13.0 |
| 14.0 | 1.15 | 0.95 | 0.85 | | 1.40 | | | | 1.40 | | | | 1.35 | | | | 1.30 | | | | 14.0 |
| 16.0 | 1.00 | 0.90 | 0.80 | 0.55 | 1.35 | 1.00 | | | 1.30 | 1.00 | | | 1.30 | 1.00 | | | 1.25 | | | | 16.0 |
| 18.0 | 0.95 | 0.85 | 0.75 | 0.50 | 1.30 | 0.95 | | | 1.25 | 0.95 | | | 1.25 | 0.95 | | | 1.20 | 0.95 | | | 18.0 |
| 20.0 | 0.85 | 0.80 | 0.75 | 0.50 | 1.20 | 0.90 | 0.75 | | 1.20 | 0.90 | 0.75 | | 1.20 | 0.90 | | | 1.15 | 0.90 | | | 20.0 |
| 22.0 | 0.80 | 0.75 | 0.70 | | 1.15 | 0.90 | 0.75 | 0.50 | 1.15 | 0.90 | 0.75 | 0.50 | 1.15 | 0.90 | 0.75 | | 1.15 | 0.90 | 0.75 | | 22.0 |
| 24.0 | 0.75 | 0.75 | | | 1.10 | 0.85 | 0.70 | 0.45 | 1.10 | 0.85 | 0.70 | 0.45 | 1.10 | 0.85 | 0.70 | 0.45 | 1.10 | 0.85 | 0.70 | 0.45 | 24.0 |
| 26.0 | | | | | 1.05 | 0.85 | 0.70 | 0.45 | 1.05 | 0.85 | 0.70 | 0.45 | 1.05 | 0.85 | 0.70 | 0.45 | 1.05 | 0.85 | 0.70 | 0.45 | 26.0 |
| 28.0 | | | | | 1.00 | 0.80 | 0.70 | 0.45 | 1.00 | 0.80 | 0.70 | 0.45 | 1.05 | 0.80 | 0.70 | 0.45 | 1.00 | 0.80 | 0.70 | 0.45 | 28.0 |
| 30.0 | | | | | 0.95 | 0.80 | 0.70 | 0.45 | 0.95 | 0.80 | 0.70 | 0.45 | 0.90 | 0.80 | 0.70 | 0.45 | 0.80 | 0.80 | 0.70 | 0.45 | 30.0 |
| 32.0 | | | | | 0.90 | 0.75 | 0.70 | | 0.90 | 0.75 | 0.70 | 0.40 | | 0.75 | 0.70 | 0.40 | | 0.75 | 0.70 | 0.40 | 32.0 |
| 34.0 | | | | | 0.80 | 0.75 | 0.70 | | 0.60 | 0.75 | 0.70 | | | 0.75 | 0.70 | 0.40 | | 0.70 | 0.70 | 0.40 | 34.0 |
| 36.0 | | | | | 0.55 | 0.75 | 0.70 | | | 0.75 | 0.70 | | | | 0.70 | | | | 0.65 | 0.40 | 36.0 |
| 38.0 | | | | | | 0.60 | 0.70 | | | 0.50 | 0.70 | | | | | | | | | | 38.0 |
| 40.0 | | | | | | 0.40 | 0.55 | | | | | | | | | | | | | | 40.0 |
| 42.0 | | | | | | | | | | | | | | | | | | | | | 42.0 |
| 44.0 | | | | | | | | | | | | | | | | | | | | | 44.0 |
| 46.0 | | | | | | | | | | | | | | | | | | | | | 46.0 |
| 48.0 | | | | | | | | | | | | | | | | | | | | | 48.0 |
| 50.0 | | | | | | | | | | | | | | | | | | | | | 50.0 |
| 52.0 | | | | | | | | | | | | | | | | | | | | | 52.0 |
| 54.0 | | | | | | | | | | | | | | | | | | | | | 54.0 |
| 55.0 | | | | | | | | | | | | | | | | | | | | | 55.0 |
| 56.0 | | | | | | | | | | | | | | | | | | | | | 56.0 |
| 1 | 0 | 0 | 0 | 0 | 0 | 0 | 0 | 0 | 46 | 46 | 46 | 46 | 92 | 92 | 92 | 92 | 100 | 100 | 100 | 100 | 1 |
| 2 | 0 | 0 | 0 | 0 | 92 | 92 | 92 | 92 | 92 | 92 | 92 | 92 | 92 | 92 | 92 | 92 | 100 | 100 | 100 | 100 | 2 |
| 3 | 0 | 0 | 0 | 0 | 92 | 92 | 92 | 92 | 92 | 92 | 92 | 92 | 92 | 92 | 92 | 92 | 100 | 100 | 100 | 100 | 3 |
| 4 | 0 | 0 | 0 | 0 | 92 | 92 | 92 | 92 | 92 | 92 | 92 | 92 | 92 | 92 | 92 | 92 | 100 | 100 | 100 | 100 | 4 |
| 5 | 0 | 0 | 0 | 0 | 92 | 92 | 92 | 92 | 92 | 92 | 92 | 92 | 92 | 92 | 92 | 92 | 100 | 100 | 100 | 100 | 5 |
| ID | 1 | 1 | 1 | 1 | 9 | 9 | 9 | 9 | 10 | 10 | 10 | 10 | 11 | 11 | 11 | 11 | 22 | 22 | 22 | 22 | ID |
| [DEG] | 19～84 | 31～84 | 51～84 | 65～84 | 51～84 | 52～84 | 54～84 | 71～84 | 57～84 | 58～84 | 61～84 | 70～84 | 64～84 | 65～84 | 66～84 | 69～84 | 65～84 | 67～84 | 68～84 | 68～84 | [DEG] |
| | 1 | 1 | 1 | 1 | 1 | 1 | 1 | 1 | 1 | 1 | 1 | 1 | 1 | 1 | 1 | 1 | 1 | 1 | 1 | 1 | |
| | 5t | 5t | 5t | 5t | 5t | 5t | 5t | 5t | 5t | 5t | 5t | 5t | 5t | 5t | 5t | 5t | 5t | 5t | 5t | 5t | |

| FAJ | 8.4m | 0.0 t | 5.38m | 360 ° | JPN |
|---|---|---|---|---|---|

| m | 10.2 | 10.2 | 10.2 | 10.2 | 38.2 | 38.2 | 38.2 | 38.2 | 41.7 | 41.7 | 41.7 | 41.7 | 45.2 | 45.2 | 45.2 | 45.2 | 48.0 | 48.0 | 48.0 | 48.0 | m |
|---|---|---|---|---|---|---|---|---|---|---|---|---|---|---|---|---|---|---|---|---|---|
| ° | 5 | 25 | 45 | 60 | 5 | 25 | 45 | 60 | 5 | 25 | 45 | 60 | 5 | 25 | 45 | 60 | 5 | 25 | 45 | 60 | ° |
| 2.0 | 4.00 | | | | | | | | | | | | | | | | | | | | 2.0 |
| 3.0 | 4.00 | | | | | | | | | | | | | | | | | | | | 3.0 |
| 4.0 | 4.00 | 4.00 | | | | | | | | | | | | | | | | | | | 4.0 |
| 5.0 | 4.00 | 4.00 | | | | | | | | | | | | | | | | | | | 5.0 |
| 6.0 | 4.00 | 4.00 | 3.00 | | | | | | | | | | | | | | | | | | 6.0 |
| 7.0 | 4.00 | 4.00 | 2.85 | | 4.00 | | | | 4.00 | | | | | | | | | | | | 7.0 |
| 8.0 | 4.00 | 4.00 | 2.70 | 1.60 | 4.00 | | | | 4.00 | | | | 4.00 | | | | 4.00 | | | | 8.0 |
| 9.0 | 4.00 | 4.00 | 2.55 | 1.55 | 4.00 | | | | 4.00 | | | | 4.00 | | | | 4.00 | | | | 9.0 |
| 10.0 | 4.00 | 3.90 | 2.45 | 1.50 | 4.00 | 4.00 | | | 4.00 | 4.00 | | | 4.00 | | | | 4.00 | | | | 10.0 |
| 11.0 | 4.00 | 3.70 | 2.35 | | 4.00 | 4.00 | | | 4.00 | 4.00 | | | 4.00 | 4.00 | | | 4.00 | | | | 11.0 |
| 12.0 | 4.00 | 3.50 | 2.30 | | 4.00 | 4.00 | 2.65 | 1.55 | 4.00 | 4.00 | 2.65 | | 4.00 | 3.95 | | | 4.00 | 3.70 | | | 12.0 |
| 13.0 | 4.00 | 3.35 | | | 4.00 | 4.00 | 2.60 | 1.50 | 4.00 | 3.90 | 2.60 | 1.50 | 4.00 | 3.80 | 2.60 | | 3.95 | 3.55 | | | 13.0 |
| 14.0 | 4.00 | 3.20 | | | 4.00 | 3.85 | 2.55 | 1.50 | 4.00 | 3.75 | 2.55 | 1.50 | 4.00 | 3.65 | 2.55 | 1.50 | 3.85 | 3.45 | 2.60 | 1.50 | 14.0 |
| 16.0 | | | | | 3.65 | 3.60 | 2.45 | 1.45 | 3.35 | 3.50 | 2.45 | 1.45 | 2.95 | 3.40 | 2.45 | 1.45 | 2.85 | 3.20 | 2.50 | 1.45 | 16.0 |
| 18.0 | | | | | 2.75 | 3.20 | 2.35 | 1.40 | 2.50 | 3.00 | 2.35 | 1.40 | 2.15 | 2.65 | 2.40 | 1.40 | 2.05 | 2.55 | 2.40 | 1.40 | 18.0 |
| 20.0 | | | | | 2.05 | 2.45 | 2.25 | 1.40 | 1.85 | 2.25 | 2.30 | 1.40 | 1.50 | 1.95 | 2.30 | 1.40 | 1.40 | 1.85 | 2.20 | 1.40 | 20.0 |
| 22.0 | | | | | 1.50 | 1.85 | 2.10 | 1.35 | 1.30 | 1.65 | 1.90 | 1.35 | 0.95 | 1.35 | 1.65 | 1.35 | | 1.30 | 1.60 | 1.35 | 22.0 |
| 24.0 | | | | | 1.05 | 1.35 | 1.55 | | 0.80 | 1.15 | 1.35 | 1.35 | | | 1.10 | 1.20 | | | 1.05 | 1.15 | 24.0 |
| 26.0 | | | | | 0.65 | 0.90 | 1.05 | | | 0.70 | 0.90 | | | | | | | | | | 26.0 |
| 28.0 | | | | | | 0.50 | 0.65 | | | | | | | | | | | | | | 28.0 |
| 30.0 | | | | | | | | | | | | | | | | | | | | | 30.0 |
| 32.0 | | | | | | | | | | | | | | | | | | | | | 32.0 |
| 34.0 | | | | | | | | | | | | | | | | | | | | | 34.0 |
| 36.0 | | | | | | | | | | | | | | | | | | | | | 36.0 |
| 38.0 | | | | | | | | | | | | | | | | | | | | | 38.0 |
| 40.0 | | | | | | | | | | | | | | | | | | | | | 40.0 |
| 42.0 | | | | | | | | | | | | | | | | | | | | | 42.0 |
| 44.0 | | | | | | | | | | | | | | | | | | | | | 44.0 |
| 46.0 | | | | | | | | | | | | | | | | | | | | | 46.0 |
| 48.0 | | | | | | | | | | | | | | | | | | | | | 48.0 |
| 50.0 | | | | | | | | | | | | | | | | | | | | | 50.0 |
| 52.0 | | | | | | | | | | | | | | | | | | | | | 52.0 |
| 54.0 | | | | | | | | | | | | | | | | | | | | | 54.0 |
| 55.0 | | | | | | | | | | | | | | | | | | | | | 55.0 |
| 56.0 | | | | | | | | | | | | | | | | | | | | | 56.0 |
| 1 | 0 | 0 | 0 | 0 | 0 | 0 | 0 | 0 | 46 | 46 | 46 | 46 | 92 | 92 | 92 | 92 | 100 | 100 | 100 | 100 | 1 |
| 2 | 0 | 0 | 0 | 0 | 92 | 92 | 92 | 92 | 92 | 92 | 92 | 92 | 92 | 92 | 92 | 92 | 100 | 100 | 100 | 100 | 2 |
| 3 | 0 | 0 | 0 | 0 | 92 | 92 | 92 | 92 | 92 | 92 | 92 | 92 | 92 | 92 | 92 | 92 | 100 | 100 | 100 | 100 | 3 |
| 4 | 0 | 0 | 0 | 0 | 92 | 92 | 92 | 92 | 92 | 92 | 92 | 92 | 92 | 92 | 92 | 92 | 100 | 100 | 100 | 100 | 4 |
| 5 | 0 | 0 | 0 | 0 | 92 | 92 | 92 | 92 | 92 | 92 | 92 | 92 | 92 | 92 | 92 | 92 | 100 | 100 | 100 | 100 | 5 |
| ID | 1 | 1 | 1 | 1 | 9 | 9 | 9 | 9 | 10 | 10 | 10 | 10 | 11 | 11 | 11 | 11 | 22 | 22 | 22 | 22 | ID |
| [DEG] | 28～84 | 35～84 | 54～84 | 68～84 | 55～84 | 55～84 | 57～84 | 68～84 | 61～84 | 61～84 | 63～84 | 67～84 | 66～84 | 69～84 | 68～84 | 69～84 | 69～84 | 70～84 | 70～84 | 71～84 | [DEG] |
| | 1 | 1 | 1 | 1 | 1 | 1 | 1 | 1 | 1 | 1 | 1 | 1 | 1 | 1 | 1 | 1 | 1 | 1 | 1 | 1 | |
| | 5t | 5t | 5t | 5t | 5t | 5t | 5t | 5t | 5t | 5t | 5t | 5t | 5t | 5t | 5t | 5t | 5t | 5t | 5t | 5t | |

| FAJ | 13.1m | 0.0 t | 5.38m | 360 ° | JPN |
|---|---|---|---|---|---|

| m | 10.2 | 10.2 | 10.2 | 10.2 | 38.2 | 38.2 | 38.2 | 38.2 | 41.7 | 41.7 | 41.7 | 41.7 | 45.2 | 45.2 | 45.2 | 45.2 | 48.0 | 48.0 | 48.0 | 48.0 | m |
|---|---|---|---|---|---|---|---|---|---|---|---|---|---|---|---|---|---|---|---|---|---|
| ° | 5 | 25 | 45 | 60 | 5 | 25 | 45 | 60 | 5 | 25 | 45 | 60 | 5 | 25 | 45 | 60 | 5 | 25 | 45 | 60 | ° |
| 2.0 | 2.80 | | | | | | | | | | | | | | | | | | | | 2.0 |
| 3.0 | 2.80 | | | | | | | | | | | | | | | | | | | | 3.0 |
| 4.0 | 2.80 | | | | | | | | | | | | | | | | | | | | 4.0 |
| 5.0 | 2.80 | | | | | | | | | | | | | | | | | | | | 5.0 |
| 6.0 | 2.80 | | | | | | | | | | | | | | | | | | | | 6.0 |
| 7.0 | 2.80 | 2.60 | | | | | | | | | | | | | | | | | | | 7.0 |
| 8.0 | 2.80 | 2.45 | | | 2.80 | | | | 2.80 | | | | | | | | | | | | 8.0 |
| 9.0 | 2.80 | 2.30 | | | 2.80 | | | | 2.80 | | | | 2.80 | | | | | | | | 9.0 |
| 10.0 | 2.65 | 2.20 | 1.75 | | 2.80 | | | | 2.80 | | | | 2.80 | | | | 2.65 | | | | 10.0 |
| 11.0 | 2.50 | 2.10 | 1.65 | | 2.80 | | | | 2.80 | | | | 2.80 | | | | 2.65 | | | | 11.0 |
| 12.0 | 2.35 | 2.00 | 1.55 | 0.90 | 2.80 | | | | 2.80 | | | | 2.75 | | | | 2.60 | | | | 12.0 |
| 13.0 | 2.25 | 1.95 | 1.50 | 0.85 | 2.80 | 2.20 | | | 2.80 | 2.20 | | | 2.70 | | | | 2.55 | | | | 13.0 |
| 14.0 | 2.10 | 1.85 | 1.45 | 0.85 | 2.80 | 2.15 | | | 2.75 | 2.15 | | | 2.65 | 2.15 | | | 2.55 | | | | 14.0 |
| 16.0 | 1.95 | 1.75 | 1.35 | | 2.70 | 2.05 | 1.55 | | 2.65 | 2.05 | 1.55 | | 2.60 | 2.05 | | | 2.45 | 2.05 | | | 16.0 |
| 18.0 | 1.80 | 1.65 | | | 2.55 | 2.00 | 1.50 | 0.80 | 2.55 | 2.00 | 1.50 | 0.80 | 2.50 | 2.00 | 1.50 | 0.80 | 2.40 | 1.95 | 1.50 | | 18.0 |
| 20.0 | 1.70 | | | | 2.45 | 1.90 | 1.40 | 0.80 | 2.20 | 1.90 | 1.45 | 0.80 | 1.85 | 1.90 | 1.45 | 0.80 | 1.80 | 1.90 | 1.45 | 0.80 | 20.0 |
| 22.0 | | | | | 1.90 | 1.85 | 1.35 | 0.75 | 1.65 | 1.85 | 1.35 | 0.75 | 1.35 | 1.85 | 1.40 | 0.75 | 1.25 | 1.85 | 1.40 | 0.75 | 22.0 |
| 24.0 | | | | | 1.40 | 1.80 | 1.30 | 0.75 | 1.20 | 1.70 | 1.35 | 0.75 | 0.90 | 1.40 | 1.35 | 0.75 | | 1.35 | 1.35 | 0.75 | 24.0 |
| 26.0 | | | | | 1.00 | 1.45 | 1.25 | 0.75 | 0.80 | 1.25 | 1.30 | 0.75 | | 1.00 | 1.30 | 0.75 | | 0.90 | 1.30 | 0.75 | 26.0 |
| 28.0 | | | | | 0.70 | 1.05 | 1.25 | | | 0.85 | 1.15 | 0.75 | | | 0.95 | 0.70 | | | 0.90 | 0.70 | 28.0 |
| 30.0 | | | | | | 0.70 | 0.95 | | | | 0.80 | | | | | | | | | | 30.0 |
| 32.0 | | | | | | | 0.60 | | | | | | | | | | | | | | 32.0 |
| 34.0 | | | | | | | | | | | | | | | | | | | | | 34.0 |
| 36.0 | | | | | | | | | | | | | | | | | | | | | 36.0 |
| 38.0 | | | | | | | | | | | | | | | | | | | | | 38.0 |
| 40.0 | | | | | | | | | | | | | | | | | | | | | 40.0 |
| 42.0 | | | | | | | | | | | | | | | | | | | | | 42.0 |
| 44.0 | | | | | | | | | | | | | | | | | | | | | 44.0 |
| 46.0 | | | | | | | | | | | | | | | | | | | | | 46.0 |
| 48.0 | | | | | | | | | | | | | | | | | | | | | 48.0 |
| 50.0 | | | | | | | | | | | | | | | | | | | | | 50.0 |
| 52.0 | | | | | | | | | | | | | | | | | | | | | 52.0 |
| 54.0 | | | | | | | | | | | | | | | | | | | | | 54.0 |
| 55.0 | | | | | | | | | | | | | | | | | | | | | 55.0 |
| 56.0 | | | | | | | | | | | | | | | | | | | | | 56.0 |
| 1 | 0 | 0 | 0 | 0 | 0 | 0 | 0 | 0 | 46 | 46 | 46 | 46 | 92 | 92 | 92 | 92 | 100 | 100 | 100 | 100 | 1 |
| 2 | 0 | 0 | 0 | 0 | 92 | 92 | 92 | 92 | 92 | 92 | 92 | 92 | 92 | 92 | 92 | 92 | 100 | 100 | 100 | 100 | 2 |
| 3 | 0 | 0 | 0 | 0 | 92 | 92 | 92 | 92 | 92 | 92 | 92 | 92 | 92 | 92 | 92 | 92 | 100 | 100 | 100 | 100 | 3 |
| 4 | 0 | 0 | 0 | 0 | 92 | 92 | 92 | 92 | 92 | 92 | 92 | 92 | 92 | 92 | 92 | 92 | 100 | 100 | 100 | 100 | 4 |
| 5 | 0 | 0 | 0 | 0 | 92 | 92 | 92 | 92 | 92 | 92 | 92 | 92 | 92 | 92 | 92 | 92 | 100 | 100 | 100 | 100 | 5 |
| ID | 1 | 1 | 1 | 1 | 9 | 9 | 9 | 9 | 10 | 10 | 10 | 10 | 11 | 11 | 11 | 11 | 22 | 22 | 22 | 22 | ID |
| [DEG] | 0～84 | 40～84 | 57～84 | 71～84 | 57～84 | 59～84 | 59～84 | 69～84 | 62～84 | 64～84 | 65～84 | 68～84 | 67～84 | 69～84 | 69～84 | 70～84 | 70～84 | 70～84 | 71～84 | 72～84 | [DEG] |
| | 1 | 1 | 1 | 1 | 1 | 1 | 1 | 1 | 1 | 1 | 1 | 1 | 1 | 1 | 1 | 1 | 1 | 1 | 1 | 1 | |
| | 5t | 5t | 5t | 5t | 5t | 5t | 5t | 5t | 5t | 5t | 5t | 5t | 5t | 5t | 5t | 5t | 5t | 5t | 5t | 5t | |

# フルオートジブ

| FAJ | 17.7m | 0.0 t | 5.38m | 360 ° | JPN |
|---|---|---|---|---|---|

| m | 10.2 | 10.2 | 10.2 | 10.2 | 38.2 | 38.2 | 38.2 | 38.2 | 41.7 | 41.7 | 41.7 | 41.7 | 45.2 | 45.2 | 45.2 | 45.2 | 48.0 | 48.0 | 48.0 | 48.0 | m |
|---|---|---|---|---|---|---|---|---|---|---|---|---|---|---|---|---|---|---|---|---|---|
| ° | 5 | 25 | 45 | 60 | 5 | 25 | 45 | 60 | 5 | 25 | 45 | 60 | 5 | 25 | 45 | 60 | 5 | 25 | 45 | 60 | ° |
| 2.0 | | | | | | | | | | | | | | | | | | | | | 2.0 |
| 3.0 | 1.50 | | | | | | | | | | | | | | | | | | | | 3.0 |
| 4.0 | 1.50 | | | | | | | | | | | | | | | | | | | | 4.0 |
| 5.0 | 1.50 | | | | | | | | | | | | | | | | | | | | 5.0 |
| 6.0 | 1.50 | | | | | | | | | | | | | | | | | | | | 6.0 |
| 7.0 | 1.50 | | | | | | | | | | | | | | | | | | | | 7.0 |
| 8.0 | 1.50 | | | | 1.50 | | | | | | | | | | | | | | | | 8.0 |
| 9.0 | 1.50 | 1.25 | | | 1.50 | | | | 1.50 | | | | 1.45 | | | | | | | | 9.0 |
| 10.0 | 1.45 | 1.15 | | | 1.50 | | | | 1.50 | | | | 1.45 | | | | 1.35 | | | | 10.0 |
| 11.0 | 1.35 | 1.10 | | | 1.50 | | | | 1.45 | | | | 1.40 | | | | 1.35 | | | | 11.0 |
| 12.0 | 1.25 | 1.05 | | | 1.45 | | | | 1.45 | | | | 1.40 | | | | 1.35 | | | | 12.0 |
| 13.0 | 1.20 | 1.00 | | | 1.45 | | | | 1.40 | | | | 1.35 | | | | 1.30 | | | | 13.0 |
| 14.0 | 1.15 | 0.95 | 0.85 | | 1.40 | | | | 1.40 | | | | 1.35 | | | | 1.30 | | | | 14.0 |
| 16.0 | 1.00 | 0.90 | 0.80 | 0.55 | 1.35 | 1.00 | | | 1.30 | 1.00 | | | 1.30 | 1.00 | | | 1.25 | | | | 16.0 |
| 18.0 | 0.95 | 0.85 | 0.75 | 0.50 | 1.30 | 0.95 | | | 1.25 | 0.95 | | | 1.25 | 0.95 | | | 1.20 | 0.95 | | | 18.0 |
| 20.0 | 0.85 | 0.80 | 0.75 | 0.50 | 1.20 | 0.90 | 0.75 | | 1.20 | 0.90 | 0.75 | | 1.20 | 0.90 | | | 1.15 | 0.90 | | | 20.0 |
| 22.0 | 0.80 | 0.75 | 0.70 | | 1.15 | 0.90 | 0.75 | 0.50 | 1.15 | 0.90 | 0.75 | 0.50 | 1.15 | 0.90 | 0.75 | | 1.15 | 0.90 | 0.75 | | 22.0 |
| 24.0 | 0.75 | 0.75 | | | 1.10 | 0.85 | 0.70 | 0.45 | 1.10 | 0.85 | 0.70 | 0.45 | 1.10 | 0.85 | 0.70 | 0.45 | 1.10 | 0.85 | 0.70 | 0.45 | 24.0 |
| 26.0 | | | | | 1.05 | 0.85 | 0.70 | 0.45 | 1.05 | 0.85 | 0.70 | 0.45 | | 0.85 | 0.70 | 0.45 | | 0.85 | 0.70 | 0.45 | 26.0 |
| 28.0 | | | | | 1.00 | 0.80 | 0.70 | 0.45 | 0.80 | 0.80 | 0.70 | 0.45 | | 0.80 | 0.70 | 0.45 | | 0.80 | 0.70 | 0.45 | 28.0 |
| 30.0 | | | | | 0.70 | 0.80 | 0.70 | 0.45 | | 0.80 | 0.70 | 0.45 | | | 0.70 | 0.45 | | | 0.70 | 0.45 | 30.0 |
| 32.0 | | | | | | 0.75 | 0.70 | | | 0.65 | 0.70 | 0.40 | | | 0.70 | 0.40 | | | | 0.40 | 32.0 |
| 34.0 | | | | | | 0.55 | 0.70 | | | | 0.70 | | | | | | | | | | 34.0 |
| 36.0 | | | | | | | 0.55 | | | | | | | | | | | | | | 36.0 |
| 38.0 | | | | | | | | | | | | | | | | | | | | | 38.0 |
| 40.0 | | | | | | | | | | | | | | | | | | | | | 40.0 |
| 42.0 | | | | | | | | | | | | | | | | | | | | | 42.0 |
| 44.0 | | | | | | | | | | | | | | | | | | | | | 44.0 |
| 46.0 | | | | | | | | | | | | | | | | | | | | | 46.0 |
| 48.0 | | | | | | | | | | | | | | | | | | | | | 48.0 |
| 50.0 | | | | | | | | | | | | | | | | | | | | | 50.0 |
| 52.0 | | | | | | | | | | | | | | | | | | | | | 52.0 |
| 54.0 | | | | | | | | | | | | | | | | | | | | | 54.0 |
| 55.0 | | | | | | | | | | | | | | | | | | | | | 55.0 |
| 56.0 | | | | | | | | | | | | | | | | | | | | | 56.0 |
| 1 | 0 | 0 | 0 | 0 | 0 | 0 | 0 | 0 | 46 | 46 | 46 | 46 | 92 | 92 | 92 | 92 | 100 | 100 | 100 | 100 | 1 |
| 2 | 0 | 0 | 0 | 0 | 92 | 92 | 92 | 92 | 92 | 92 | 92 | 92 | 92 | 92 | 92 | 92 | 100 | 100 | 100 | 100 | 2 |
| 3 | 0 | 0 | 0 | 0 | 92 | 92 | 92 | 92 | 92 | 92 | 92 | 92 | 92 | 92 | 92 | 92 | 100 | 100 | 100 | 100 | 3 |
| 4 | 0 | 0 | 0 | 0 | 92 | 92 | 92 | 92 | 92 | 92 | 92 | 92 | 92 | 92 | 92 | 92 | 100 | 100 | 100 | 100 | 4 |
| 5 | 0 | 0 | 0 | 0 | 92 | 92 | 92 | 92 | 92 | 92 | 92 | 92 | 92 | 92 | 92 | 92 | 100 | 100 | 100 | 100 | 5 |
| ID | 1 | 1 | 1 | 1 | 9 | 9 | 9 | 9 | 10 | 10 | 10 | 10 | 11 | 11 | 11 | 11 | 22 | 22 | 22 | 22 | ID |
| [DEG] | 19～84 | 31～84 | 51～84 | 65～84 | 59～84 | 60～84 | 61～84 | 71～84 | 64～84 | 65～84 | 66～84 | 70～84 | 69～84 | 71～84 | 70～84 | 71～84 | 70～84 | 72～84 | 74～84 | 72～84 | [DEG] |
| | 1 | 1 | 1 | 1 | 1 | 1 | 1 | 1 | 1 | 1 | 1 | 1 | 1 | 1 | 1 | 1 | 1 | 1 | 1 | 1 | |
| | 5t | 5t | 5t | 5t | 5t | 5t | 5t | 5t | 5t | 5t | 5t | 5t | 5t | 5t | 5t | 5t | 5t | 5t | 5t | 5t | |

| FAJ | 8.4m | 0.0 t | 4.18m | 360 ° | JPN |
|---|---|---|---|---|---|

| m | 10.2 | 10.2 | 10.2 | 10.2 | 38.2 | 38.2 | 38.2 | 38.2 | 41.7 | 41.7 | 41.7 | 41.7 | 45.2 | 45.2 | 45.2 | 45.2 | 48.0 | 48.0 | 48.0 | 48.0 | m |
|---|---|---|---|---|---|---|---|---|---|---|---|---|---|---|---|---|---|---|---|---|---|
| ° | 5 | 25 | 45 | 60 | 5 | 25 | 45 | 60 | 5 | 25 | 45 | 60 | 5 | 25 | 45 | 60 | 5 | 25 | 45 | 60 | ° |
| 2.0 | 4.00 | | | | | | | | | | | | | | | | | | | | 2.0 |
| 3.0 | 4.00 | | | | | | | | | | | | | | | | | | | | 3.0 |
| 4.0 | 4.00 | 4.00 | | | | | | | | | | | | | | | | | | | 4.0 |
| 5.0 | 4.00 | 4.00 | | | | | | | | | | | | | | | | | | | 5.0 |
| 6.0 | 4.00 | 4.00 | 3.00 | | | | | | | | | | | | | | | | | | 6.0 |
| 7.0 | 4.00 | 4.00 | 2.85 | | 4.00 | | | | 4.00 | | | | | | | | | | | | 7.0 |
| 8.0 | 4.00 | 4.00 | 2.70 | 1.60 | 4.00 | | | | 4.00 | | | | 4.00 | | | | 4.00 | | | | 8.0 |
| 9.0 | 4.00 | 4.00 | 2.55 | 1.55 | 4.00 | | | | 4.00 | | | | 4.00 | | | | 4.00 | | | | 9.0 |
| 10.0 | 4.00 | 3.90 | 2.45 | 1.50 | 4.00 | 4.00 | | | 4.00 | 4.00 | | | 4.00 | | | | 4.00 | | | | 10.0 |
| 11.0 | 4.00 | 3.70 | 2.35 | | 4.00 | 4.00 | | | 4.00 | 4.00 | | | 3.90 | 4.00 | | | 3.80 | | | | 11.0 |
| 12.0 | 4.00 | 3.50 | 2.30 | | 4.00 | 4.00 | 2.65 | 1.55 | 3.65 | 4.00 | 2.65 | | 3.25 | 3.95 | | | 3.15 | 3.70 | | | 12.0 |
| 13.0 | 4.00 | 3.35 | | | 3.40 | 4.00 | 2.60 | 1.50 | 3.10 | 3.75 | 2.60 | 1.50 | 2.70 | 3.40 | 2.60 | | 2.60 | 3.30 | | | 13.0 |
| 14.0 | 3.65 | 3.20 | | | 2.85 | 3.45 | 2.55 | 1.50 | 2.60 | 3.20 | 2.55 | 1.50 | 2.20 | 2.90 | 2.55 | 1.50 | 2.10 | 2.80 | 2.60 | 1.50 | 14.0 |
| 16.0 | | | | | 2.00 | 2.55 | 2.45 | 1.45 | 1.75 | 2.30 | 2.45 | 1.45 | 1.40 | 2.00 | 2.45 | 1.45 | | 1.90 | 2.35 | 1.45 | 16.0 |
| 18.0 | | | | | 1.35 | 1.80 | 2.15 | 1.40 | 1.10 | 1.60 | 1.95 | 1.40 | | 1.30 | 1.65 | 1.40 | | | 1.60 | 1.40 | 18.0 |
| 20.0 | | | | | 0.80 | 1.20 | 1.50 | 1.40 | | 1.00 | 1.30 | 1.40 | | | | 1.20 | | | | | 20.0 |
| 22.0 | | | | | | 0.70 | 0.95 | 1.05 | | | | 0.90 | | | | | | | | | 22.0 |
| 24.0 | | | | | | | | | | | | | | | | | | | | | 24.0 |
| 26.0 | | | | | | | | | | | | | | | | | | | | | 26.0 |
| 28.0 | | | | | | | | | | | | | | | | | | | | | 28.0 |
| 30.0 | | | | | | | | | | | | | | | | | | | | | 30.0 |
| 32.0 | | | | | | | | | | | | | | | | | | | | | 32.0 |
| 34.0 | | | | | | | | | | | | | | | | | | | | | 34.0 |
| 36.0 | | | | | | | | | | | | | | | | | | | | | 36.0 |
| 38.0 | | | | | | | | | | | | | | | | | | | | | 38.0 |
| 40.0 | | | | | | | | | | | | | | | | | | | | | 40.0 |
| 42.0 | | | | | | | | | | | | | | | | | | | | | 42.0 |
| 44.0 | | | | | | | | | | | | | | | | | | | | | 44.0 |
| 46.0 | | | | | | | | | | | | | | | | | | | | | 46.0 |
| 48.0 | | | | | | | | | | | | | | | | | | | | | 48.0 |
| 50.0 | | | | | | | | | | | | | | | | | | | | | 50.0 |
| 52.0 | | | | | | | | | | | | | | | | | | | | | 52.0 |
| 54.0 | | | | | | | | | | | | | | | | | | | | | 54.0 |
| 55.0 | | | | | | | | | | | | | | | | | | | | | 55.0 |
| 56.0 | | | | | | | | | | | | | | | | | | | | | 56.0 |
| 1 | 0 | 0 | 0 | 0 | 0 | 0 | 0 | 0 | 46 | 46 | 46 | 46 | 92 | 92 | 92 | 92 | 100 | 100 | 100 | 100 | 1 |
| 2 | 0 | 0 | 0 | 0 | 92 | 92 | 92 | 92 | 92 | 92 | 92 | 92 | 92 | 92 | 92 | 92 | 100 | 100 | 100 | 100 | 2 |
| 3 | 0 | 0 | 0 | 0 | 92 | 92 | 92 | 92 | 92 | 92 | 92 | 92 | 92 | 92 | 92 | 92 | 100 | 100 | 100 | 100 | 3 |
| 4 | 0 | 0 | 0 | 0 | 92 | 92 | 92 | 92 | 92 | 92 | 92 | 92 | 92 | 92 | 92 | 92 | 100 | 100 | 100 | 100 | 4 |
| 5 | 0 | 0 | 0 | 0 | 92 | 92 | 92 | 92 | 92 | 92 | 92 | 92 | 92 | 92 | 92 | 92 | 100 | 100 | 100 | 100 | 5 |
| ID | 1 | 1 | 1 | 1 | 9 | 9 | 9 | 9 | 10 | 10 | 10 | 10 | 11 | 11 | 11 | 11 | 22 | 22 | 22 | 22 | ID |
| [DEG] | 28～84 | 35～84 | 54～84 | 68～84 | 64～84 | 64～84 | 67～84 | 68～84 | 68～84 | 69～84 | 71～84 | 70～84 | 72～84 | 73～84 | 75～84 | 74～84 | 75～84 | 76～84 | 76～84 | 77～84 | [DEG] |
| | 1 | 1 | 1 | 1 | 1 | 1 | 1 | 1 | 1 | 1 | 1 | 1 | 1 | 1 | 1 | 1 | 1 | 1 | 1 | 1 | |
| | 5t | 5t | 5t | 5t | 5t | 5t | 5t | 5t | 5t | 5t | 5t | 5t | 5t | 5t | 5t | 5t | 5t | 5t | 5t | 5t | |

| FAJ | 13.1m | 0.0 t | 4.18m | 360 ° | JPN |
|---|---|---|---|---|---|

| m | 10.2 | 10.2 | 10.2 | 10.2 | 38.2 | 38.2 | 38.2 | 38.2 | 41.7 | 41.7 | 41.7 | 41.7 | 45.2 | 45.2 | 45.2 | 45.2 | 48.0 | 48.0 | 48.0 | 48.0 | m |
|---|---|---|---|---|---|---|---|---|---|---|---|---|---|---|---|---|---|---|---|---|---|
| ° | 5 | 25 | 45 | 60 | 5 | 25 | 45 | 60 | 5 | 25 | 45 | 60 | 5 | 25 | 45 | 60 | 5 | 25 | 45 | 60 | ° |
| 2.0 | 2.80 | | | | | | | | | | | | | | | | | | | | 2.0 |
| 3.0 | 2.80 | | | | | | | | | | | | | | | | | | | | 3.0 |
| 4.0 | 2.80 | | | | | | | | | | | | | | | | | | | | 4.0 |
| 5.0 | 2.80 | | | | | | | | | | | | | | | | | | | | 5.0 |
| 6.0 | 2.80 | | | | | | | | | | | | | | | | | | | | 6.0 |
| 7.0 | 2.80 | 2.60 | | | | | | | | | | | | | | | | | | | 7.0 |
| 8.0 | 2.80 | 2.45 | | | 2.80 | | | | 2.80 | | | | | | | | | | | | 8.0 |
| 9.0 | 2.80 | 2.30 | | | 2.80 | | | | 2.80 | | | | 2.80 | | | | | | | | 9.0 |
| 10.0 | 2.65 | 2.20 | 1.75 | | 2.80 | | | | 2.80 | | | | 2.80 | | | | 2.65 | | | | 10.0 |
| 11.0 | 2.50 | 2.10 | 1.65 | | 2.80 | | | | 2.80 | | | | 2.80 | | | | 2.65 | | | | 11.0 |
| 12.0 | 2.35 | 2.00 | 1.55 | 0.90 | 2.80 | | | | 2.80 | | | | 2.75 | | | | 2.60 | | | | 12.0 |
| 13.0 | 2.25 | 1.95 | 1.50 | 0.85 | 2.80 | 2.20 | | | 2.80 | 2.20 | | | 2.70 | | | | 2.55 | | | | 13.0 |
| 14.0 | 2.10 | 1.85 | 1.45 | 0.85 | 2.80 | 2.15 | | | 2.75 | 2.15 | | | 2.60 | 2.15 | | | 2.50 | | | | 14.0 |
| 16.0 | 1.95 | 1.75 | 1.35 | | 2.40 | 2.05 | 1.55 | | 2.15 | 2.05 | 1.55 | | 1.80 | 2.05 | | | 1.70 | 2.05 | | | 16.0 |
| 18.0 | 1.80 | 1.65 | | | 1.75 | 2.00 | 1.50 | 0.80 | 1.50 | 2.00 | 1.50 | 0.80 | 1.20 | 1.90 | 1.50 | 0.80 | | 1.85 | 1.50 | | 18.0 |
| 20.0 | 1.70 | | | | 1.20 | 1.80 | 1.40 | 0.80 | 1.00 | 1.60 | 1.45 | 0.80 | | 1.30 | 1.45 | 0.80 | | 1.25 | 1.45 | 0.80 | 20.0 |
| 22.0 | | | | | 0.75 | 1.30 | 1.35 | 0.75 | | 1.10 | 1.35 | 0.75 | | | 1.30 | 0.75 | | | 1.25 | 0.75 | 22.0 |
| 24.0 | | | | | | 0.85 | 1.20 | 0.75 | | | 1.05 | 0.75 | | | | 0.75 | | | | | 24.0 |
| 26.0 | | | | | | | 0.80 | 0.75 | | | | 0.75 | | | | | | | | | 26.0 |
| 28.0 | | | | | | | | | | | | | | | | | | | | | 28.0 |
| 30.0 | | | | | | | | | | | | | | | | | | | | | 30.0 |
| 32.0 | | | | | | | | | | | | | | | | | | | | | 32.0 |
| 34.0 | | | | | | | | | | | | | | | | | | | | | 34.0 |
| 36.0 | | | | | | | | | | | | | | | | | | | | | 36.0 |
| 38.0 | | | | | | | | | | | | | | | | | | | | | 38.0 |
| 40.0 | | | | | | | | | | | | | | | | | | | | | 40.0 |
| 42.0 | | | | | | | | | | | | | | | | | | | | | 42.0 |
| 44.0 | | | | | | | | | | | | | | | | | | | | | 44.0 |
| 46.0 | | | | | | | | | | | | | | | | | | | | | 46.0 |
| 48.0 | | | | | | | | | | | | | | | | | | | | | 48.0 |
| 50.0 | | | | | | | | | | | | | | | | | | | | | 50.0 |
| 52.0 | | | | | | | | | | | | | | | | | | | | | 52.0 |
| 54.0 | | | | | | | | | | | | | | | | | | | | | 54.0 |
| 55.0 | | | | | | | | | | | | | | | | | | | | | 55.0 |
| 56.0 | | | | | | | | | | | | | | | | | | | | | 56.0 |
| 1 | 0 | 0 | 0 | 0 | 0 | 0 | 0 | 0 | 46 | 46 | 46 | 46 | 92 | 92 | 92 | 92 | 100 | 100 | 100 | 100 | 1 |
| 2 | 0 | 0 | 0 | 0 | 92 | 92 | 92 | 92 | 92 | 92 | 92 | 92 | 92 | 92 | 92 | 92 | 100 | 100 | 100 | 100 | 2 |
| 3 | 0 | 0 | 0 | 0 | 92 | 92 | 92 | 92 | 92 | 92 | 92 | 92 | 92 | 92 | 92 | 92 | 100 | 100 | 100 | 100 | 3 |
| 4 | 0 | 0 | 0 | 0 | 92 | 92 | 92 | 92 | 92 | 92 | 92 | 92 | 92 | 92 | 92 | 92 | 100 | 100 | 100 | 100 | 4 |
| 5 | 0 | 0 | 0 | 0 | 92 | 92 | 92 | 92 | 92 | 92 | 92 | 92 | 92 | 92 | 92 | 92 | 100 | 100 | 100 | 100 | 5 |
| ID | 1 | 1 | 1 | 1 | 9 | 9 | 9 | 9 | 10 | 10 | 10 | 10 | 11 | 11 | 11 | 11 | 22 | 22 | 22 | 22 | ID |
| [DEG] | 0～84 | 40～84 | 57～84 | 71～84 | 65～84 | 67～84 | 68～84 | 69～84 | 69～84 | 71～84 | 72～84 | 71～84 | 73～84 | 75～84 | 76～84 | 75～84 | 75～84 | 76～84 | 77～84 | 78～84 | [DEG] |
| | 1 | 1 | 1 | 1 | 1 | 1 | 1 | 1 | 1 | 1 | 1 | 1 | 1 | 1 | 1 | 1 | 1 | 1 | 1 | 1 | |
| | 5t | 5t | 5t | 5t | 5t | 5t | 5t | 5t | 5t | 5t | 5t | 5t | 5t | 5t | 5t | 5t | 5t | 5t | 5t | 5t | |

| FAJ | 17.7m | 0.0 t | 4.18m | 360 ° | JPN |
|---|---|---|---|---|---|

| m | 10.2 | 10.2 | 10.2 | 10.2 | 38.2 | 38.2 | 38.2 | 38.2 | 41.7 | 41.7 | 41.7 | 41.7 | 45.2 | 45.2 | 45.2 | 45.2 | 48.0 | 48.0 | 48.0 | 48.0 | m |
|---|---|---|---|---|---|---|---|---|---|---|---|---|---|---|---|---|---|---|---|---|---|
| ° | 5 | 25 | 45 | 60 | 5 | 25 | 45 | 60 | 5 | 25 | 45 | 60 | 5 | 25 | 45 | 60 | 5 | 25 | 45 | 60 | ° |
| 2.0 | | | | | | | | | | | | | | | | | | | | | 2.0 |
| 3.0 | 1.50 | | | | | | | | | | | | | | | | | | | | 3.0 |
| 4.0 | 1.50 | | | | | | | | | | | | | | | | | | | | 4.0 |
| 5.0 | 1.50 | | | | | | | | | | | | | | | | | | | | 5.0 |
| 6.0 | 1.50 | | | | | | | | | | | | | | | | | | | | 6.0 |
| 7.0 | 1.50 | | | | | | | | | | | | | | | | | | | | 7.0 |
| 8.0 | 1.50 | | | | 1.50 | | | | | | | | | | | | | | | | 8.0 |
| 9.0 | 1.50 | 1.25 | | | 1.50 | | | | 1.50 | | | | 1.45 | | | | | | | | 9.0 |
| 10.0 | 1.45 | 1.15 | | | 1.50 | | | | 1.50 | | | | 1.45 | | | | 1.35 | | | | 10.0 |
| 11.0 | 1.35 | 1.10 | | | 1.50 | | | | 1.45 | | | | 1.40 | | | | 1.35 | | | | 11.0 |
| 12.0 | 1.25 | 1.05 | | | 1.45 | | | | 1.45 | | | | 1.40 | | | | 1.35 | | | | 12.0 |
| 13.0 | 1.20 | 1.00 | | | 1.45 | | | | 1.40 | | | | 1.35 | | | | 1.30 | | | | 13.0 |
| 14.0 | 1.15 | 0.95 | 0.85 | | 1.40 | | | | 1.40 | | | | 1.35 | | | | 1.30 | | | | 14.0 |
| 16.0 | 1.00 | 0.90 | 0.80 | 0.55 | 1.35 | 1.00 | | | 1.30 | 1.00 | | | 1.30 | 1.00 | | | 1.25 | | | | 16.0 |
| 18.0 | 0.95 | 0.85 | 0.75 | 0.50 | 1.30 | 0.95 | | | 1.25 | 0.95 | | | 1.25 | 0.95 | | | 1.20 | 0.95 | | | 18.0 |
| 20.0 | 0.85 | 0.80 | 0.75 | 0.50 | 1.20 | 0.90 | 0.75 | | 1.20 | 0.90 | 0.75 | | | 0.90 | | | | 0.90 | | | 20.0 |
| 22.0 | 0.80 | 0.75 | 0.70 | | 1.10 | 0.90 | 0.75 | 0.50 | 0.85 | 0.90 | 0.75 | 0.50 | | 0.90 | 0.75 | | | 0.90 | 0.75 | | 22.0 |
| 24.0 | 0.75 | 0.75 | | | 0.70 | 0.85 | 0.70 | 0.45 | | 0.85 | 0.70 | 0.45 | | | 0.70 | 0.45 | | | 0.70 | 0.45 | 24.0 |
| 26.0 | | | | | | 0.85 | 0.70 | 0.45 | | 0.75 | 0.70 | 0.45 | | | 0.70 | 0.45 | | | 0.70 | 0.45 | 26.0 |
| 28.0 | | | | | | 0.60 | 0.70 | 0.45 | | | 0.70 | 0.45 | | | | 0.45 | | | | | 28.0 |
| 30.0 | | | | | | | 0.65 | 0.45 | | | | 0.45 | | | | | | | | | 30.0 |
| 32.0 | | | | | | | | | | | | | | | | | | | | | 32.0 |
| 34.0 | | | | | | | | | | | | | | | | | | | | | 34.0 |
| 36.0 | | | | | | | | | | | | | | | | | | | | | 36.0 |
| 38.0 | | | | | | | | | | | | | | | | | | | | | 38.0 |
| 40.0 | | | | | | | | | | | | | | | | | | | | | 40.0 |
| 42.0 | | | | | | | | | | | | | | | | | | | | | 42.0 |
| 44.0 | | | | | | | | | | | | | | | | | | | | | 44.0 |
| 46.0 | | | | | | | | | | | | | | | | | | | | | 46.0 |
| 48.0 | | | | | | | | | | | | | | | | | | | | | 48.0 |
| 50.0 | | | | | | | | | | | | | | | | | | | | | 50.0 |
| 52.0 | | | | | | | | | | | | | | | | | | | | | 52.0 |
| 54.0 | | | | | | | | | | | | | | | | | | | | | 54.0 |
| 55.0 | | | | | | | | | | | | | | | | | | | | | 55.0 |
| 56.0 | | | | | | | | | | | | | | | | | | | | | 56.0 |
| 1 | 0 | 0 | 0 | 0 | 0 | 0 | 0 | 0 | 46 | 46 | 46 | 46 | 92 | 92 | 92 | 92 | 100 | 100 | 100 | 100 | 1 |
| 2 | 0 | 0 | 0 | 0 | 92 | 92 | 92 | 92 | 92 | 92 | 92 | 92 | 92 | 92 | 92 | 92 | 100 | 100 | 100 | 100 | 2 |
| 3 | 0 | 0 | 0 | 0 | 92 | 92 | 92 | 92 | 92 | 92 | 92 | 92 | 92 | 92 | 92 | 92 | 100 | 100 | 100 | 100 | 3 |
| 4 | 0 | 0 | 0 | 0 | 92 | 92 | 92 | 92 | 92 | 92 | 92 | 92 | 92 | 92 | 92 | 92 | 100 | 100 | 100 | 100 | 4 |
| 5 | 0 | 0 | 0 | 0 | 92 | 92 | 92 | 92 | 92 | 92 | 92 | 92 | 92 | 92 | 92 | 92 | 100 | 100 | 100 | 100 | 5 |
| ID | 1 | 1 | 1 | 1 | 9 | 9 | 9 | 9 | 10 | 10 | 10 | 10 | 11 | 11 | 11 | 11 | 22 | 22 | 22 | 22 | ID |
| [DEG] | 19～84 | 31～84 | 51～84 | 65～84 | 66～84 | 67～84 | 69～84 | 71～84 | 70～84 | 71～84 | 73～84 | 73～84 | 75～84 | 76～84 | 76～84 | 76～84 | 75～84 | 77～84 | 77～84 | 79～84 | [DEG] |
| | 1 | 1 | 1 | 1 | 1 | 1 | 1 | 1 | 1 | 1 | 1 | 1 | 1 | 1 | 1 | 1 | 1 | 1 | 1 | 1 | |
| | 5t | 5t | 5t | 5t | 5t | 5t | 5t | 5t | 5t | 5t | 5t | 5t | 5t | 5t | 5t | 5t | 5t | 5t | 5t | 5t | |

# 作業半径ー揚程図

## 作業半径ー揚程図

■10.2mブーム + ジブ

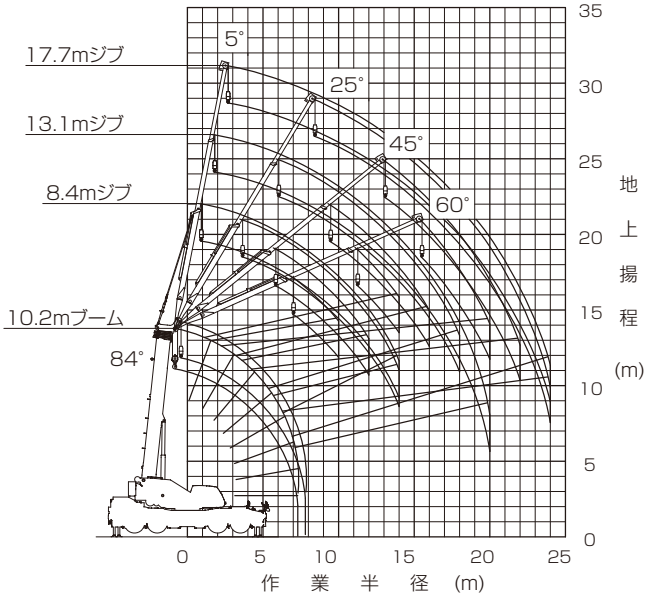


■38.2mブーム + ジブ

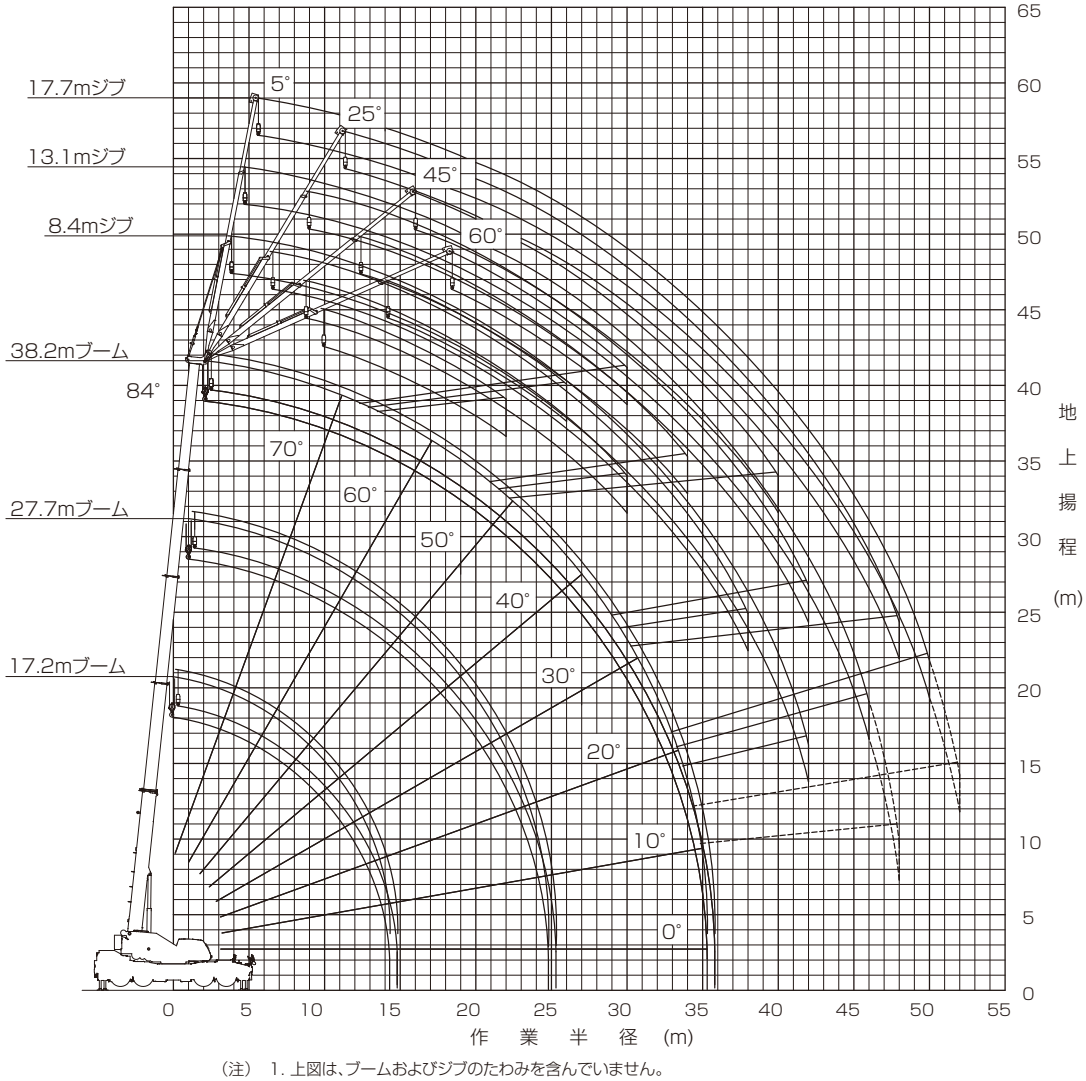


（注） 1. 上図は、ブームおよびジブのたわみを含んでいません。
2. 上図は、アウトリガ最大 (7.8m) 張出状態、カウンタウエイト装着状態での図です。
3. 上図破線の部分は、スマートチャート1性能の場合を示しています。

# 作業半径ー揚程図

■41.7mブーム＋ジブ

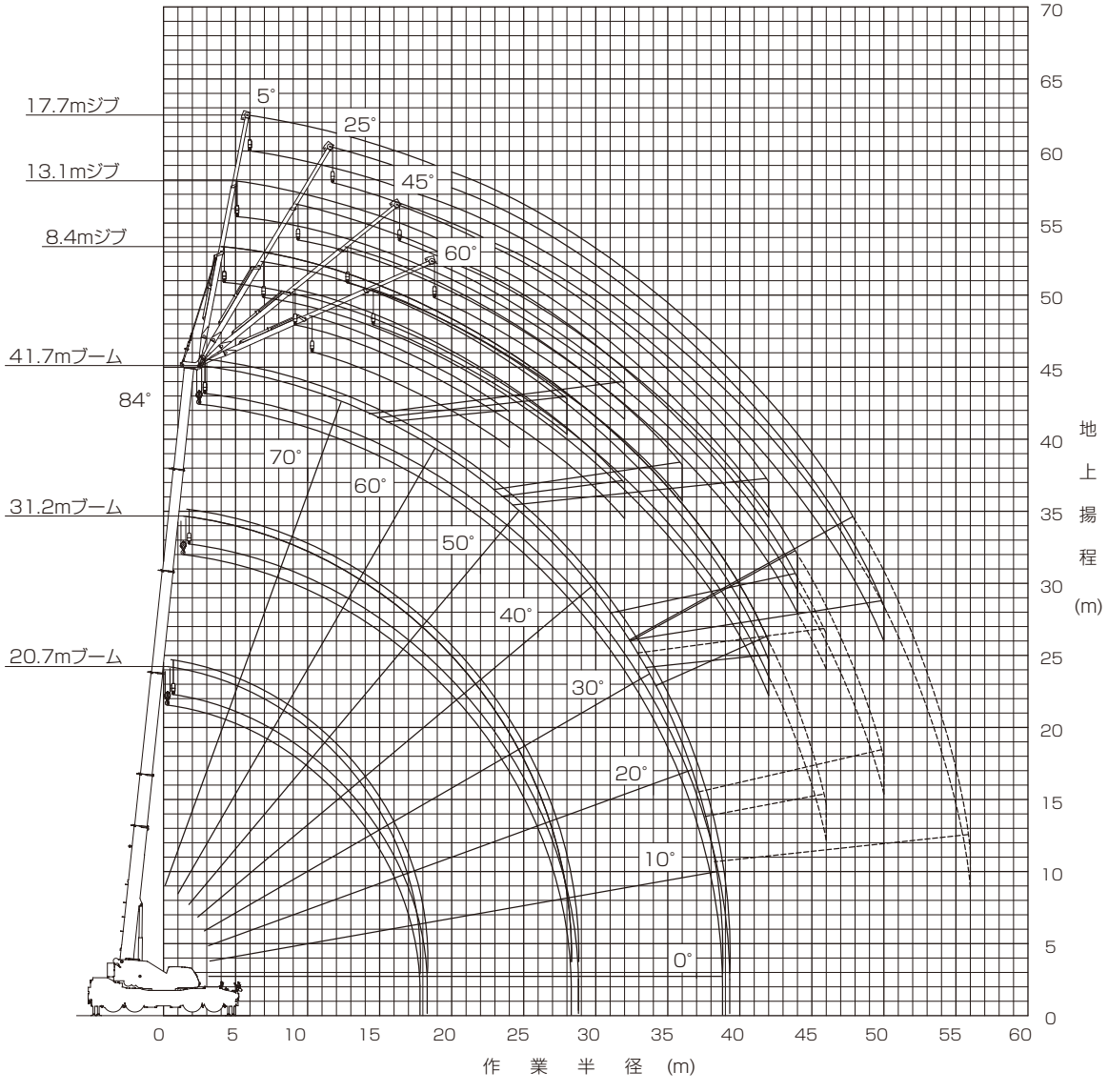


（注） 1. 上図は、ブームおよびジブのたわみを含んでいません。
2. 上図は、アウトリガ最大 (7.8m) 張出状態、カウンタウエイト装着状態での図です。
3. 上図破線の部分は、スマートチャート1性能の場合を示しています。

# 作業半径ー揚程図

## 作業半径ー揚程図

■45.2mブーム + ジブ

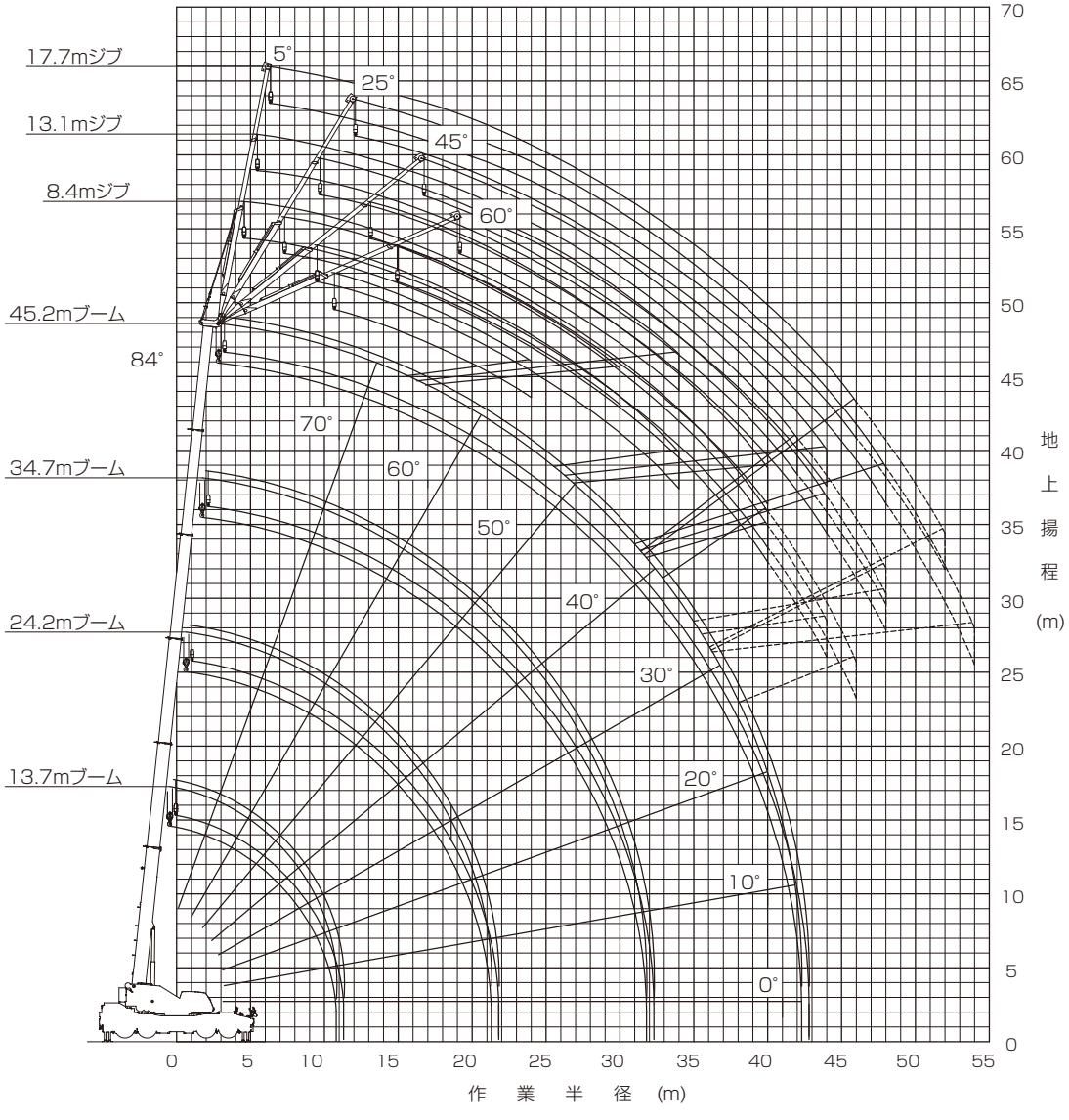


（注）1. 上図は、ブームおよびジブのたわみを含んでいません。
2. 上図は、アウトリガ最大 (7.8m) 張出状態、カウンタウエイト装着状態での図です。
3. 上図破線の部分は、スマートチャート1性能の場合を示しています。

# 作業半径ー揚程図

■48.0mブーム＋ジブ

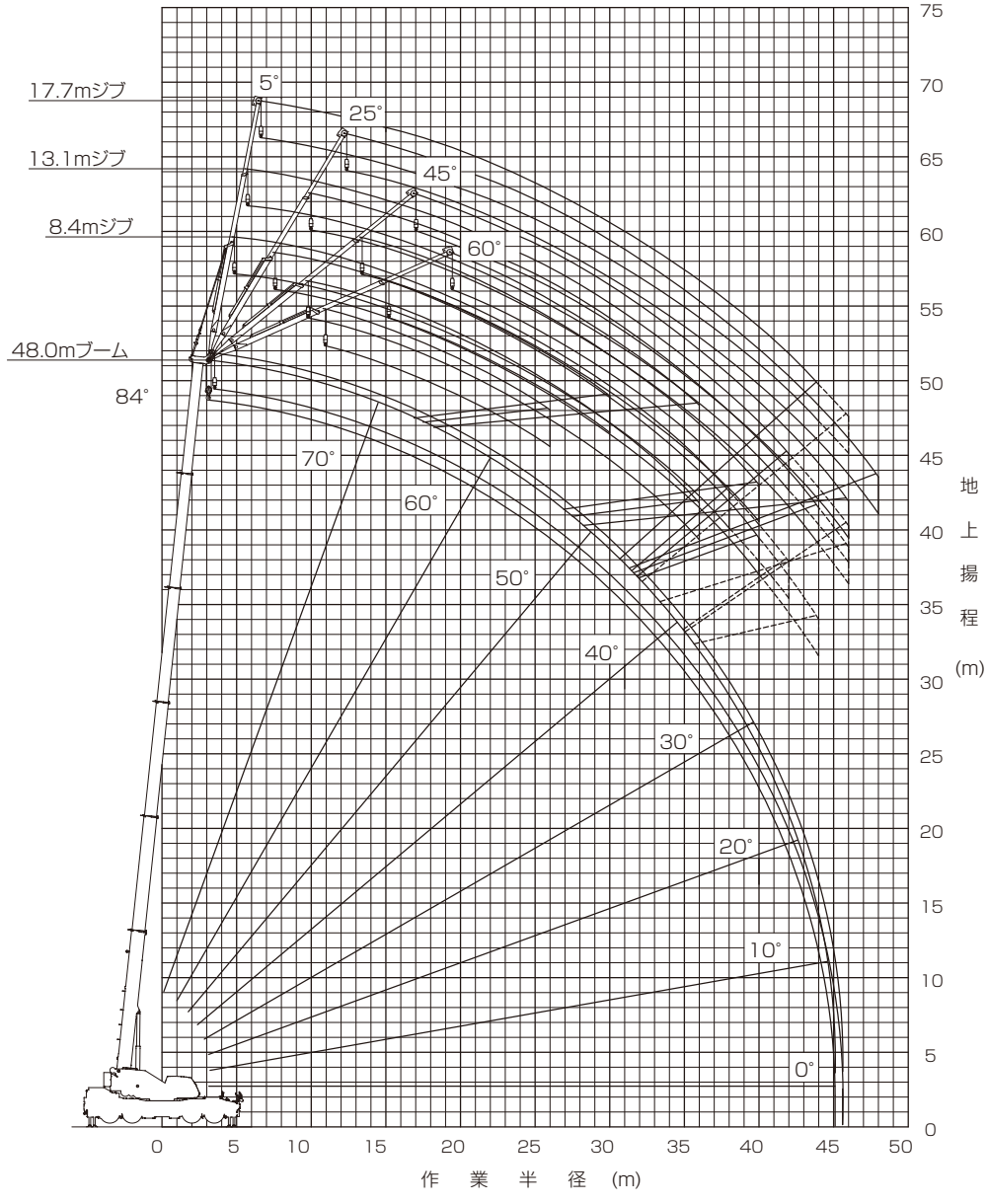


（注） 1. 上図は、ブームおよびジブのたわみを含んでいません。
2. 上図は、アウトリガ最大 (7.8m) 張出状態、カウンタウエイト装着状態での図です。
3. 上図破線の部分は、スマートチャート1性能の場合を示しています。

# 作業領域

■ 作業領域図の見方

【標準性能】

作業領域図の円の大きさは、アウトリガ張出幅で決まる性能に対応しています。
さらにカウンタウエイトの装着状態に応じて下表のように制限しています。

| | C/W 質量 / 性能区分 | 適用性能（ブーム作業） | | 適用性能（ジブ作業） | |
|---|---|---|---|---|---|
| | | 4 t | 0 t | 4 t | 0 t |
| 円 1 | 7.8 m | ○ | ○ | ○ | ○ |
| 円 2 | 7.6 m | ○ | ○ | ○ | ○ |
| 円 3 | 7.2 m | ○ | ○ | ○ | ○ |
| 円 4 | （ 6.8 m ） | ○ | ○ | ○ | ○ |
| 円 5 | 6.4 m | ○ | ○ | ○ | ○ |
| 円 6 | （ 6.0 m ） | ○ | ○ | ○ | ○ |
| 円 7 | 5.38 m | ○ | ○ | ○ | ○ |
| 円 8 | （ 4.8 m ） | ○ | ○ | ○ | ○ |
| 円 9 | 4.18 m | ○ | ○ | ○ | ○ |
| 円 10 | （ 3.5 m ） | | ○ | | |
| 円 11 | 2.36 m | | ○ | | |

－例－
図のアウトリガ張出幅でブーム作業を行う場合、作業領域別の性能および範囲は、次のようになります。

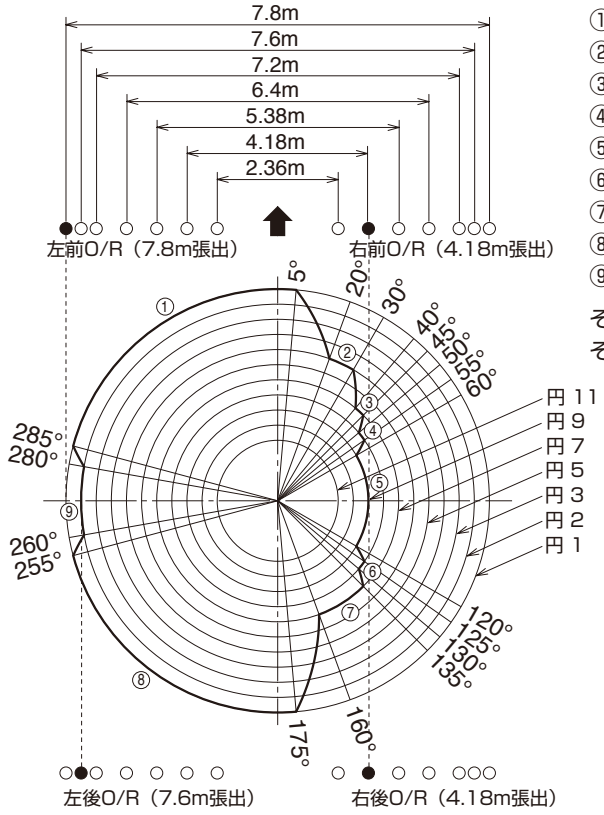


①の領域：最大張出（7.8m）性能
②の領域：中間張出（6.4m）性能
③の領域：中間張出（5.38m）性能
④の領域：アウトリガ張出幅（4.8m）で補間計算した性能
⑤の領域：中間張出（4.18m）性能
⑥の領域：アウトリガ張出幅（4.8m）で補間計算した性能
⑦の領域：中間張出（5.38m）性能
⑧の領域：最大張出（7.8m）性能
⑨の領域：中間張出（7.6m）性能

それぞれの性能領域を結ぶ切換領域は5°とし、
それぞれの性能で比例して増減しています。

# 作業領域

■ 作業領域図

【標準性能】

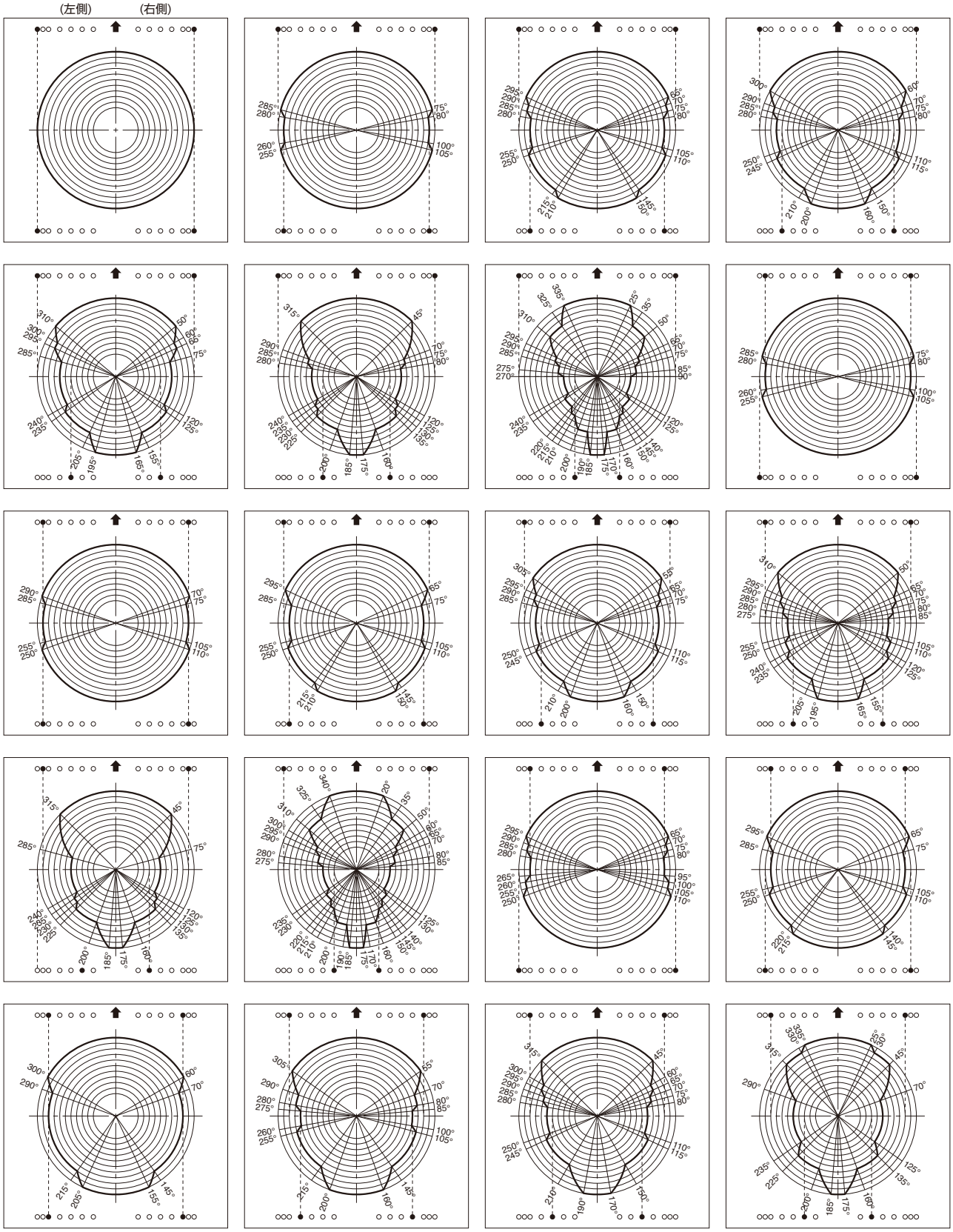

# 作業領域

【標準性能】

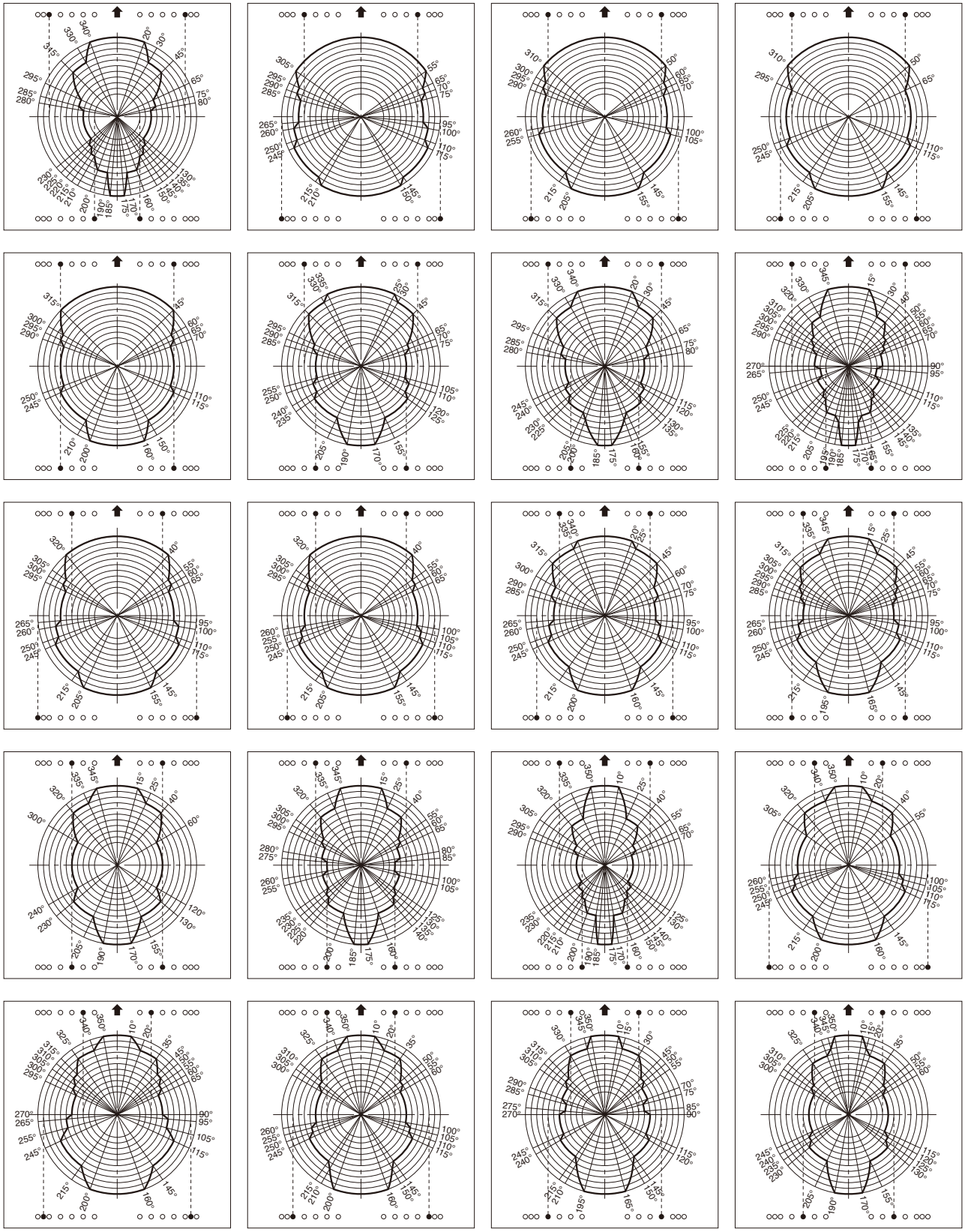

# 作業領域

【標準性能】

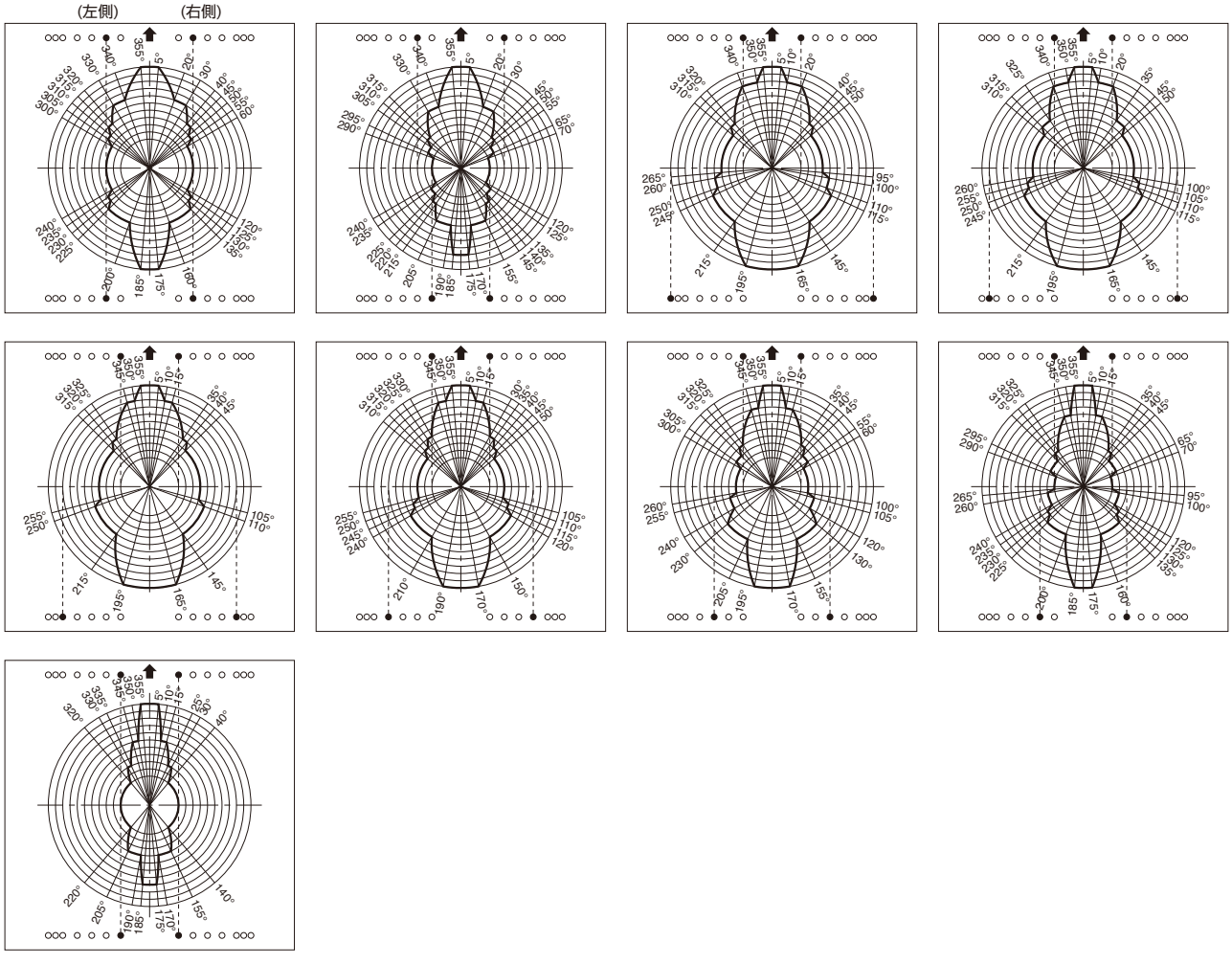

# 作業領域

■ 作業領域図の見方

【スマートチャート性能】

作業領域図の円の大きさは、アウトリガ張出幅で決まる性能に対応しています。
さらにカウンタウエイトの装着状態に応じて下表のように制限しています。

| | C/W 質量 / 性能区分 | 適用性能（ブーム作業） | | 適用性能（ジブ作業） | |
|---|---|---|---|---|---|
| | | 4 t | 0 t | 4 t | 0 t |
| 領域① | スマートチャート1 | ○ | ○ | ○ | ○ |
| 領域② | スマートチャート2 | ○ | ○ | ○ | ○ |
| 円 1 | 7.8 m | ○ | ○ | ○ | ○ |
| 円 2 | 7.6 m | ○ | ○ | ○ | ○ |
| 円 3 | 7.2 m | ○ | ○ | ○ | ○ |
| 円 4 | （ 6.8 m ） | ○ | ○ | ○ | ○ |
| 円 5 | 6.4 m | ○ | ○ | ○ | ○ |
| 円 6 | （ 6.0 m ） | ○ | ○ | ○ | ○ |
| 円 7 | 5.38 m | ○ | ○ | ○ | ○ |
| 円 8 | （ 4.8 m ） | ○ | ○ | ○ | ○ |
| 円 9 | 4.18 m | ○ | ○ | ○ | ○ |
| 円 10 | （ 3.5 m ） | | ○ | | |
| 円 11 | 2.36 m | | ○ | | |

－例－
図のアウトリガ張出幅でブーム作業を行う場合、作業領域別の性能および範囲は、次のようになります。

スマートチャート性能は、前方の安定度で決まるスマートチャート1性能と後方の安定度で決まるスマートチャート2性能から成り立っています。また、各性能の変化部分は比例補間されます。

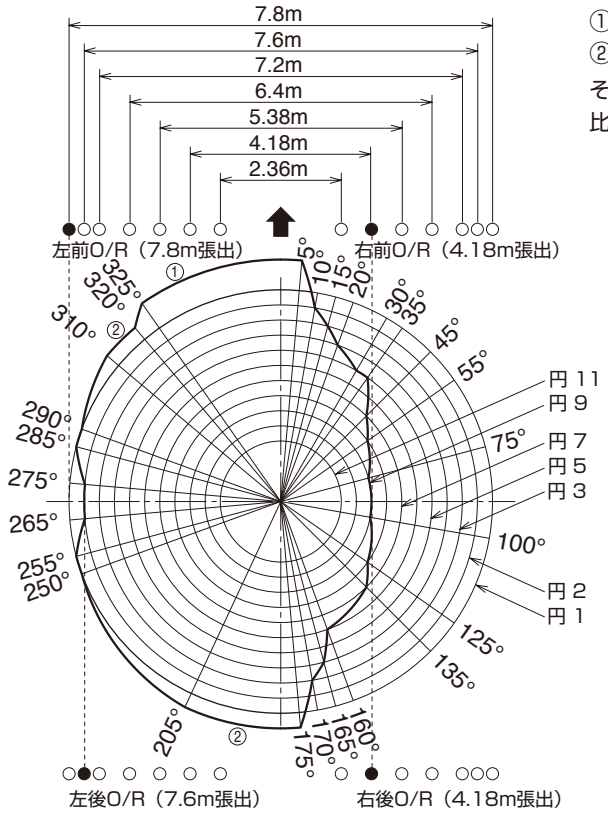


①の領域：スマートチャート1性能
②の領域：スマートチャート2性能
それぞれの性能領域を結ぶ切換領域はそれぞれの性能で比例して増減しています。

# 作業領域

■ 作業領域図

【スマートチャート性能】

(左側)　(右側)

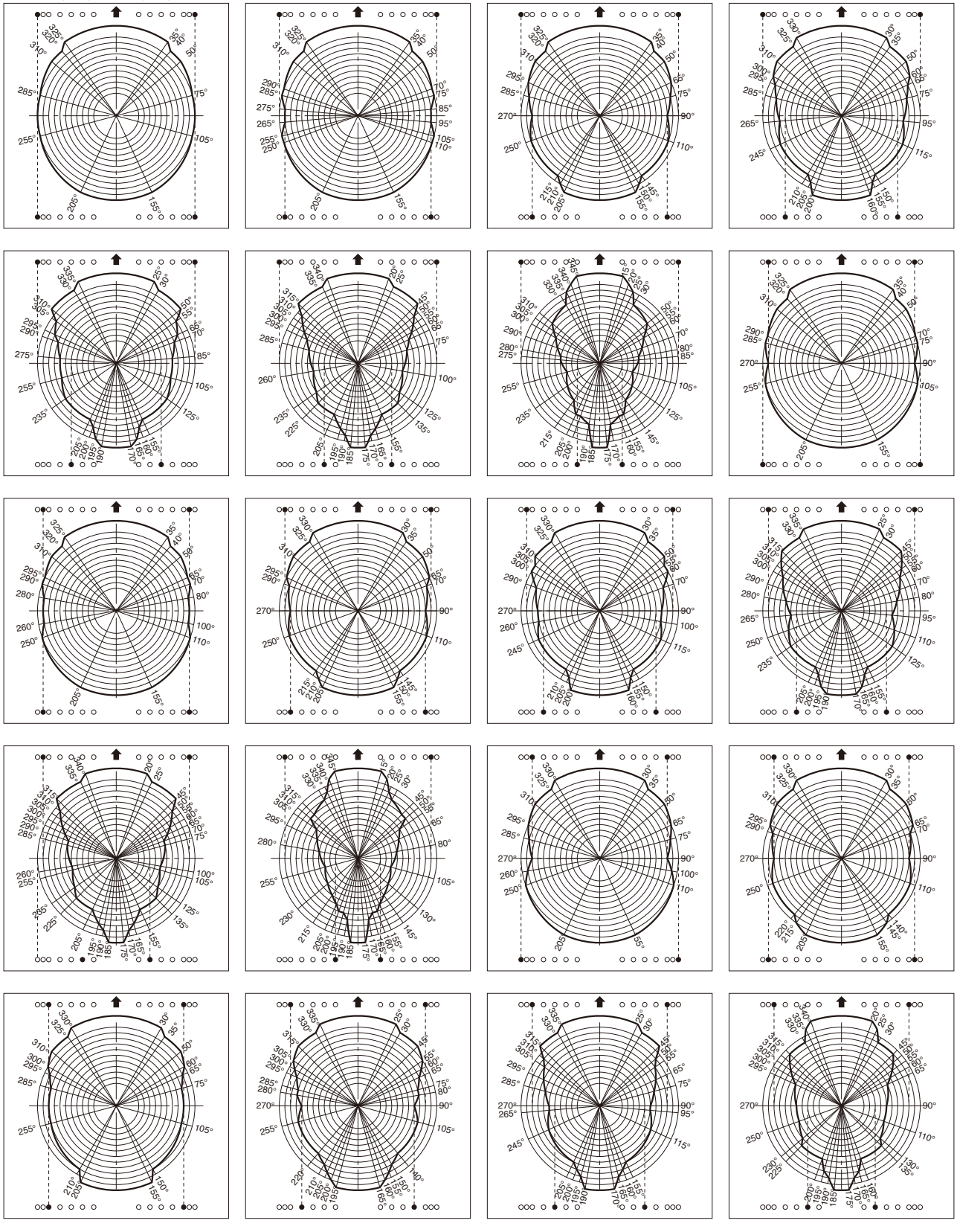

# 作業領域

SMART CHART

【スマートチャート性能】

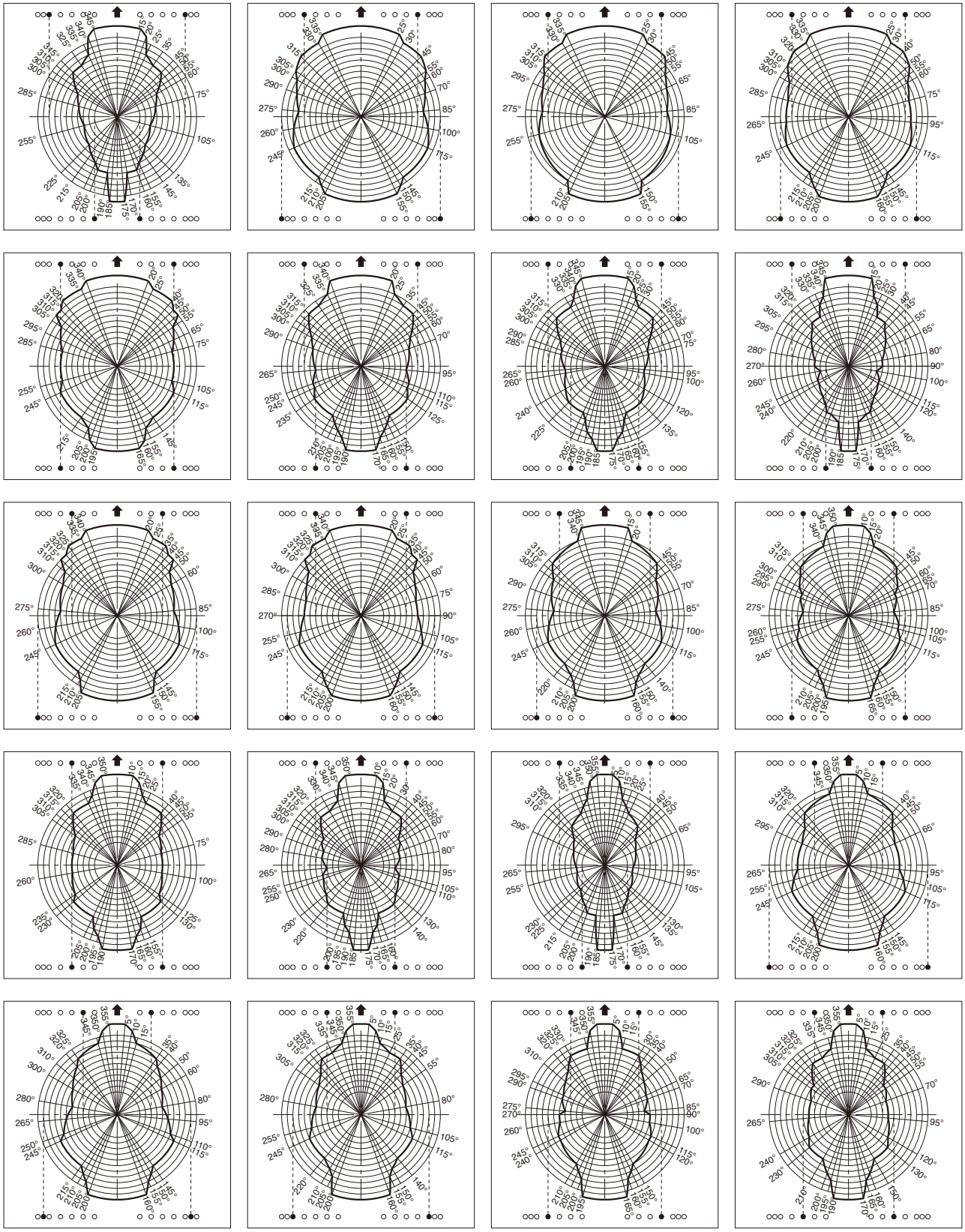

# 作業領域

【スマートチャート性能】

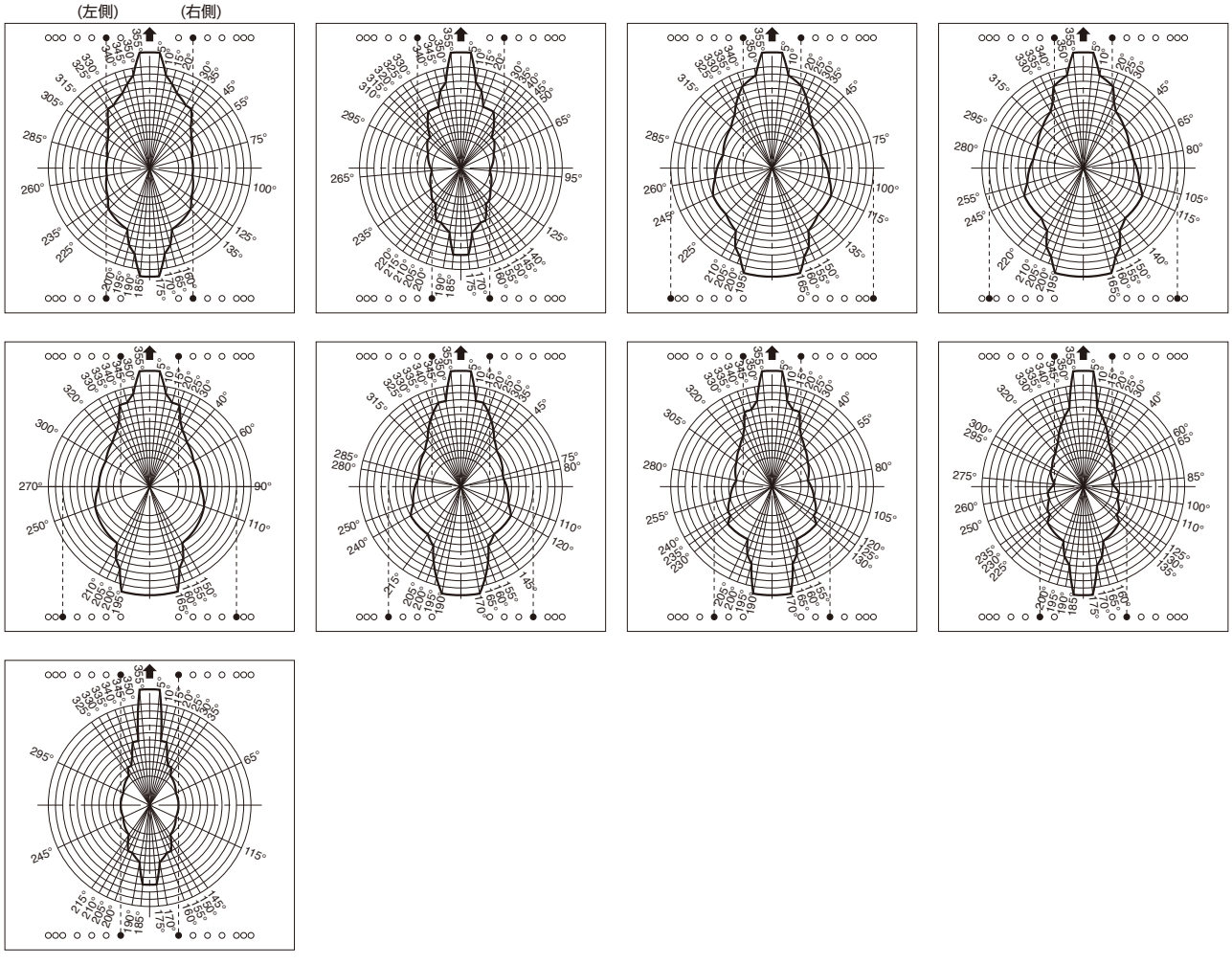

# MEMO

# MEMO

TADANO

●製品は、改良などのためこの仕様と相違する場合もありますので、ご了承ください。

GR-1000N-1-00121　ブーム＋フルオートジブ(FAJ)仕様
2019-08